PROMAKSAN®

ATLAS PRO III®

Lightens Your Load

Lifting and Handling Equipment

ROUND CHAIN HOISTS



ATCY 053

Capacity	0.5 Ton
Lifting Height	3 m
Test Load	0.75 Ton
Number of Falls	1
Load Chain Dimension	6 mm
Weight	9 kg

ATCY 055

Capacity	0.5 Ton
Lifting Height	5 m
Test Load	0.75 Ton
Number of Falls	1
Load Chain Dimension	6 mm
Weight	12 kg



ATCY 23

Capacity	2 Ton
Lifting Height	3 m
Test Load	3 Ton
Number of Falls	2
Load Chain Dimension	6 mm
Weight	14 kg

ATCY 25

Capacity	2 Ton
Lifting Height	5 m
Test Load	3 Ton
Number of Falls	2
Load Chain Dimension	6 mm
Weight	18.3 kg



ATCY 013

Capacity	1 Ton
Lifting Height	3 m
Test Load	1.5 Ton
Number of Falls	1
Load Chain Dimension	6 mm
Weight	9.4 kg

ATCY 015

Capacity	1 Ton
Lifting Height	5 m
Test Load	1.5 Ton
Number of Falls	1
Load Chain Dimension	6 mm
Weight	12.2 kg



ATCY 33

Capacity	3 Ton
Lifting Height	3 m
Test Load	4.5 Ton
Number of Falls	2
Load Chain Dimension	8 mm
Weight	21.7 kg

ATCY 35

Capacity	3 Ton
Lifting Height	5 m
Test Load	4.5 Ton
Number of Falls	2
Load Chain Dimension	8 mm
Weight	29 kg

NEW PRODUCT



ATCY 53

Capacity	5 Ton
Lifting Height	3 m
Test Load	7.5 Ton
Number of Falls	2
Load Chain Dimension	10 mm
Weight	35 kg

ATCY 55

Capacity	5 Ton
Lifting Height	5 m
Test Load	7.5 Ton
Number of Falls	2
Load Chain Dimension	10 mm
Weight	45 kg



Hook Safety Latch



High Strength Body



Galvanized Load Chain

ATCY series Round Chain Hoists, provide optimal usage advantage in high-ceiling indoor areas with their long hand chain and mini design. It t is equipped with a high grade **alloyed galvanized load chain.**

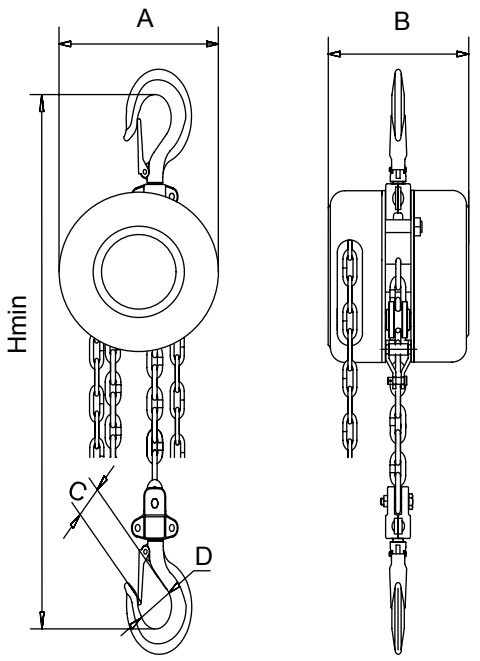

ATCY 053, ATCY 055, ATCY 013, ATCY 015, ATCY 23, ATCY 25, ATCY 33, ATCY 35, ATCY53, ATCY55

MODEL		ATCY 053	ATCY 055	ATCY 013	ATCY 015	ATCY 23	ATCY 25	ATCY 33	ATCY 35	ATCY 53	ATCY55
Dimens.	A	142 mm	142 mm	142 mm	142 mm	142 mm	142 mm	178 mm	178 mm	210 mm	210 mm
	B	126 mm	126 mm	126 mm	126 mm	126 mm	126 mm	142 mm	142 mm	165 mm	165 mm
	C	24 mm	24 mm	28 mm	28 mm	36 mm	36 mm	39 mm	39 mm	41 mm	41 mm
	D	35 mm	35 mm	40 mm	40 mm	50 mm	50 mm	55 mm	55 mm	65 mm	65 mm
	Hmin	315 mm	315 mm	355 mm	355 mm	470 mm	470 mm	555 mm	555 mm	640 mm	640 mm

SQUARE TYPE CHAIN HOISTS



ATCK 053

Capacity	0.5 Ton
Lifting Height	3 m
Test Load	0.75 Ton
Number of Falls	1
Load Chain Dimension	6 mm
Weight	10 kg

ATCK 055

Capacity	0.5 Ton
Lifting Height	5 m
Test Load	0.75 Ton
Number of Falls	1
Load Chain Dimension	6 mm
Weight	13 kg



ATCK 23

Capacity	2 Ton
Lifting Height	3 m
Test Load	3 Ton
Number of Falls	1
Load Chain Dimension	8 mm
Weight	18 kg

ATCK 25

Capacity	2 Ton
Lifting Height	5 m
Test Load	3 Ton
Number of Falls	1
Load Chain Dimension	8 mm
Weight	22.5 kg

NEW PRODUCT

ATCK 2-10

Capacity	2 Ton
Lifting Height	10 m
Test Load	3 Ton
Number of Falls	1
Load Chain Dimension	8 mm
Weight	33.4 kg



ATCK 13

Capacity	1 Ton
Lifting Height	3 m
Test Load	1.5 Ton
Number of Falls	1
Load Chain Dimension	6 mm
Weight	12.5 kg

ATCK 15

Capacity	1 Ton
Lifting Height	5 m
Test Load	1.5 Ton
Number of Falls	1
Load Chain Dimension	6 mm
Weight	15 kg

NEW PRODUCT

ATCK 1-10

Capacity	1 Ton
Lifting Height	10 m
Test Load	1.5 Ton
Number of Falls	1
Load Chain Dimension	6 mm
Weight	23.7 kg



ATCK 33

Capacity	3 Ton
Lifting Height	3 m
Test Load	4.5 Ton
Number of Falls	2
Load Chain Dimension	8 mm
Weight	24.5 kg

ATCK 35

Capacity	3 Ton
Lifting Height	5 m
Test Load	4.5 Ton
Number of Falls	2
Load Chain Dimension	8 mm
Weight	30 kg

NEW PRODUCT

ATCK 3-10

Capacity	3 Ton
Lifting Height	10 m
Test Load	4.5 Ton
Number of Falls	2
Load Chain Dimension	8 mm
Weight	49.7 kg



ATCK 53

Capacity	5 Ton
Lifting Height	3 m
Test Load	7.5 Ton
Number of Falls	2
Load Chain Dimension	10 mm
Weight	39.5 kg

ATCK 55

Capacity	5 Ton
Lifting Height	5 m
Test Load	7.5 Ton
Number of Falls	2
Load Chain Dimension	10 mm
Weight	49 kg

NEW PRODUCT

ATCK 5-10

Capacity	5 Ton
Lifting Height	10 m
Test Load	7.5 Ton
Number of Falls	2
Load Chain Dimension	10 mm
Weight	75.9kg



ATCK 105

Capacity	10 Ton
Lifting Height	5 m
Test Load	15 Ton
Number of Falls	4
Load Chain Dimension	10 mm
Weight	99 kg

NEW PRODUCT

ATCK 10-10

Capacity	10 Ton
Lifting Height	10 m
Test Load	15 Ton
Number of Falls	4
Load Chain Dimension	10 mm
Weight	146.7 kg



ATCK 205

Capacity	20 Ton
Lifting Height	5 m
Test Load	30 Ton
Number of Falls	8
Load Chain Dimension	10 mm
Weight	211 kg

ATCK 305

Capacity	30 Ton
Lifting Height	5 m
Test Load	45 Ton
Number of Falls	12
Load Chain Dimension	10 mm
Weight	284 kg

ATCK series Square Type Chain Hoists, are specially designed for portability and durability. **Their professional and robust structure** offers a long-term usage advantage. With its specially treated chains, **its strength and rust-resistance features are at the highest level.**

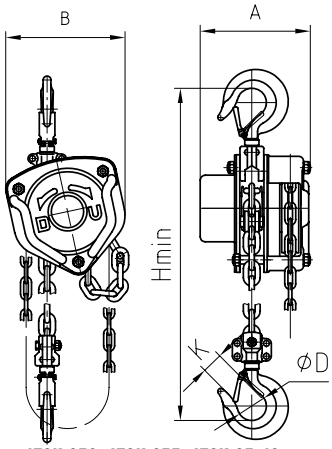

ATCK 053, ATCK 055, ATCK 05-10, ATCK 013, ATCK 015, ATCK 01-10, ATCK 23, ATCK 25, ATCK 2-10



Shaft-Mounted Brake Disc



High Strength Body



Cast Safety Latch



Specially Treated Applied Black Chain



High Quality Forged Steel Hook



Cover Design Providing Easy Chain Replacement



Safe Braking with Wide Brake Lining Diameter



Brake System Safety Cover

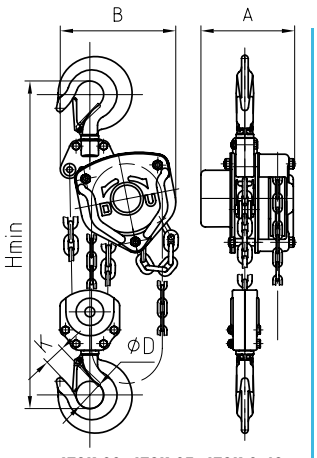

ATCK 33, ATCK 35, ATCK 3-10 ATCK 53, ATCK 55, ATCK 5-10

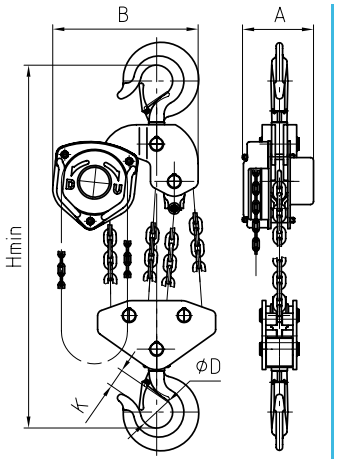

ATCK 105 ATCK 10-10

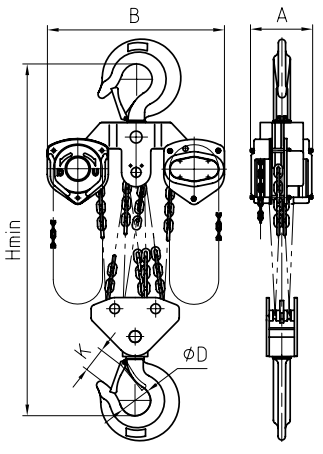

ATCK 205

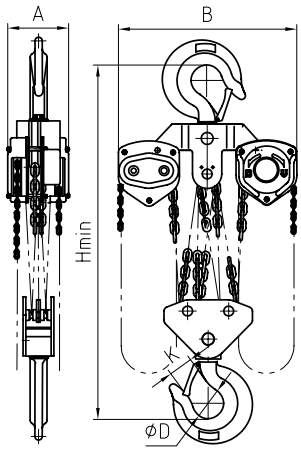

ATCK 305

MODEL		ATCK 053 ATCK 055 ATCK 05-10	ATCK 13 ATCK 13 ATCK 1-10	ATCK 23 ATCK 25 ATCK 2-10	ATCK 33 ATCK 35 ATCK 3-10	ATCK 53 ATCK 55 ATCK 5-10	ATCK 105 ATCK 10-10	ATCK 205	ATCK 305
Dim.	A	137.5 mm	146.5 mm	170 mm	170 mm	190.4 mm	190 mm	209 mm	312 mm
	B	137 mm	162 mm	194 mm	220 mm	288 mm	384 mm	625 mm	691 mm
	D	35 mm	35.5 mm	42.5 mm	50 mm	64 mm	85 mm	110 mm	110 mm
	K	28 mm	26 mm	32 mm	37 mm	46 mm	50 mm	81 mm	81 mm
	Hmin	270 mm	340 mm	414 mm	512 mm	636 mm	743 mm	890 mm	1380 mm

OVERLOAD PROTECTED CHAIN HOISTS



ATSOC 15

Capacity	1 Ton
Lifting Height	5 m
Test Load	1.5 Ton
Number of Falls	1
Load Chain Dimension	6 mm
Weight	13.5 kg

ATSOC 1-12

Capacity	1 Ton
Lifting Height	12 m
Test Load	1.5 Ton
Number of Falls	1
Load Chain Dimension	6 mm
Weight	25.5 kg



ATSOC 25

Capacity	2 Ton
Lifting Height	5 m
Test Load	3 Ton
Number of Falls	1
Load Chain Dimension	8 mm
Weight	20.5 kg

ATSOC 2-12

Capacity	2 Ton
Lifting Height	12 m
Test Load	3 Ton
Number of Falls	1
Load Chain Dimension	8 mm
Weight	38 kg



ATSOC 35

Capacity	3 Ton
Lifting Height	5 m
Test Load	4.5 Ton
Number of Falls	2
Load Chain Dimension	7.1 mm
Weight	30 kg

ATSOC 3-12

Capacity	3 Ton
Lifting Height	12 m
Test Load	4.5 Ton
Number of Falls	2
Load Chain Dimension	7.1 mm
Weight	52.5 kg



ATSOC 55

Capacity	
Lifting Height	5 m
Test Load	7.5 Ton
Number of Falls	2
Load Chain Dimension	9 mm
Weight	42 kg

ATSOC 5-12

Capacity	5 Ton
Lifting Height	12 m
Test Load	7.5 Ton
Number of Falls	2
Load Chain Dimension	9 mm
Weight	74.5 kg



ATSOC 105

Capacity	10 Ton
Lifting Height	5 m
Test Load	15 Ton
Number of Falls	4
Load Chain Dimension	9 mm
Weight	80 kg

ATSOC 10-12

Capacity	10 Ton
Lifting Height	12 m
Test Load	15 Ton
Number of Falls	4
Load Chain Dimension	9 mm
Weight	152 kg



Shaft-Mounted Brake Disc



Hook Safety Latch



Safe Braking with Wide Brake Lining Diameter



High Strength Body



Specially Treated Black Chain



Cover Design Providing Easy Chain Replacement



Overload Safety System



Brake System Safety Cover

ATSOC series Overload Protected Chain Hoists are equipped with an overload protection system for safety. When loading above the standard carrying capacity, the safety system is activated and disables the lifting system for security.

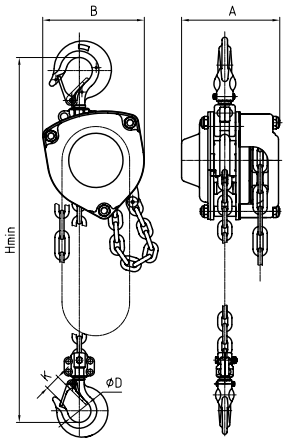

ATSOC 15, ATSOC 1-12
ATSOC 25, ATSOC 2-12

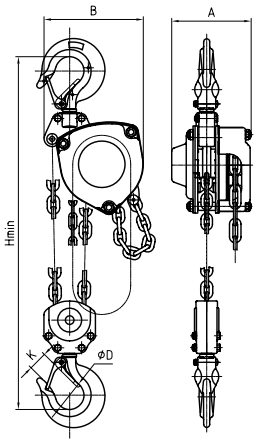

ATSOC 35, ATSOC 3-12
ATSOC 55, ATSOC 5-12

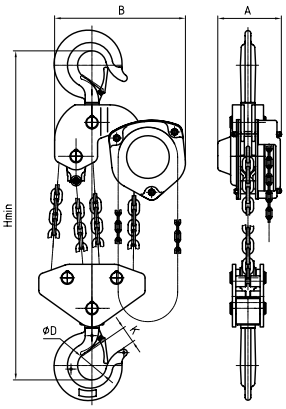

ATSOC 105, ATSOC 10-12

MODEL		ATSOC 15	ATSOC 1-12	ATSOC 25	ATSOC 2-12	ATSOC 35	ATSOC 3-12	ATSOC 55	ATSOC 5-12	ATSOC 105	ATSOC 10-12
Dim.	A	138.5 mm	138.5 mm	161 mm	161 mm	161 mm	161 mm	180 mm	180 mm	194 mm	194 mm
	B	148 mm	148 mm	175 mm	175 mm	232 mm	232 mm	258 mm	258 mm	384 mm	384 mm
	D	40 mm	40 mm	52 mm	52 mm	55 mm	55 mm	68 mm	68 mm	85 mm	85 mm
	K	26 mm	26 mm	35 mm	35 mm	39 mm	39 mm	43 mm	43 mm	58 mm	58 mm
	Hmin	345 mm	345 mm	431 mm	431 mm	414 mm	414 mm	600 mm	600 mm	798 mm	798 mm

360° CHAIN HOISTS



ATCK 13-360

Capacity	1 Ton
Lifting Height	3 m
Test Load	1.5 Ton
Number of Falls	1
Load Chain Dimension	6 mm
Weight	11 kg

ATCK 15-360

Capacity	1 Ton
Lifting Height	5 m
Test Load	1.5 Ton
Number of Falls	1
Load Chain Dimension	6 mm
Weight	14.2 kg



ATCK 23-360

Capacity	2 Ton
Lifting Height	3 m
Test Load	3 Ton
Number of Falls	1
Load Chain Dimension	8 mm
Weight	18.5 kg

ATCK 25-360

Capacity	2 Ton
Lifting Height	5 m
Test Load	3 Ton
Number of Falls	1
Load Chain Dimension	8 mm
Weight	22.9 kg

ATCK360 Series 360° Chain Hoistsn provide safe lifting and positioning of loads from any direction while maintaining a safe distance from the load. The side-operating capability of the chain hoist facilitates lifting operations, allowing the hoist to be operated from the side as well.



Shaft-Mounted Brake Disc



High-Strength Body



Hook Safety Latch



Specially Treated Black Chain



High-Quality Forged Steel Hook



Specially Designed Cover for Minimal Dust and Water



Safe Braking with Wide Brake Lining Diameter



Multi-Directional Operation

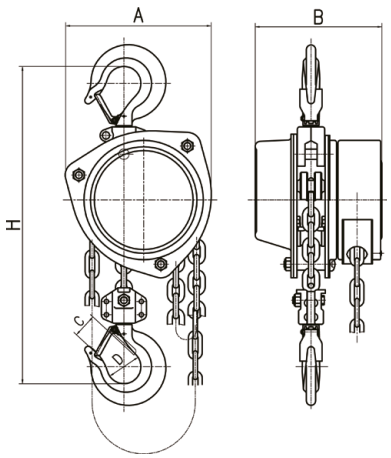

ATCK 13-360, ATCK 15-360
ATCK 23-360, ATCK 25-360

MODEL		ATCK 13-360	ATCK 15-360	ATCK 23-360	ATCK 25-360
Ölçüler	A	172 mm	172 mm	202 mm	202 mm
	B	151 mm	151 mm	177 mm	177 mm
	C	26 mm	26 mm	34 mm	34 mm
	D	40 mm	40 mm	50 mm	50 mm
	H	376 mm	376 mm	485 mm	485 mm

RATCHET LEVER HOISTS



ATHC 0.25

Capacity	0.25 Ton
Working Distance	1.5 m
Test Load	0.37 Ton
Number of Falls	1
Load Chain Dimension	4 mm
Weight	2.2 Kg



ATHC 0.5

Capacity	0.5 Ton
Working Distance	1.5 m
Test Load	0.75 Ton
Number of Falls	1
Load Chain Dimension	4 mm
Weight	3.1 Kg



ATHC 0.7

Capacity	0.75 Ton
Working Distance	1.5 m
Test Load	1.12 Ton
Number of Falls	1
Load Chain Dimension	5 mm
Weight	4.75 Kg



ATHC 1.5

Capacity	1.5 Ton
Working Distance	1.5 m
Test Load	2.25 Ton
Number of Falls	1
Load Chain Dimension	7 mm
Weight	8.5 Kg



ATHC 2.5

Capacity	2.5 Ton
Working Distance	1.5 m
Test Load	3.75 Ton
Number of Falls	1
Load Chain Dimension	9 mm
Weight	14.1 Kg



ATHC 5

Capacity	5 Ton
Working Distance	1.5 m
Test Load	7.5 Ton
Number of Falls	2
Load Chain Dimension	9 mm
Weight	25.5 kg



Practical Use With Ratchet Handle



Compact Design



Easy Hook Replacement



Galvanized Load Chain



Cast Iron Safety Latch

ATHC series Ratchet Lever Hoists are equipped with galvanized load chain. High quality is offered with suspension and load hooks manufactured from forged steel.

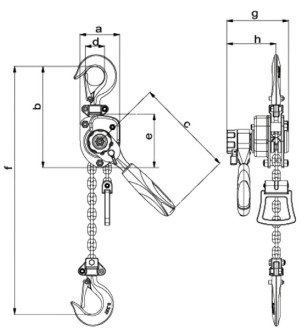

ATHC 0.25

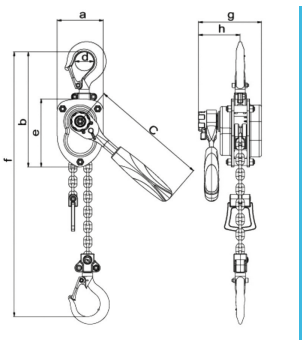

ATHC 0.5, ATHC 0.7

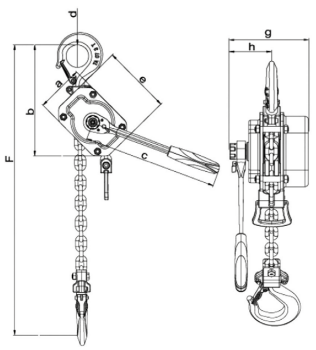

ATHC 1.5, ATHC 2.5

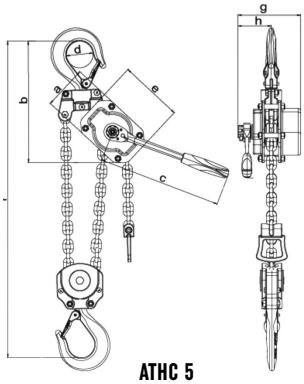

ATHC 5

MODEL		ATHC 0.25	ATHC 0.5	ATHC 0.7	ATHC 1.5	ATHC 2.5	ATHC 5
Dim.	a	62 mm	70 mm	92 mm	112 mm	126 mm	126 mm
	b	158 mm	194 mm	230 mm	234 mm	296 mm	348 mm
	c	156 mm	156 mm	232 mm	271 mm	358 mm	358 mm
	d	30 mm	35 mm	38 mm	45 mm	62 mm	68 mm
	e	84 mm	105 mm	136 mm	148 mm	184 mm	184 mm
	f	240 mm	300 mm	350 mm	355 mm	470 mm	620 mm
	g	96 mm	116 mm	128 mm	160 mm	182 mm	182 mm
	h	77 mm	79 mm	84 mm	92 mm	96 mm	96 mm

HUBZUGLAR



ATH 0.5

Capacity	0.5 Ton
Working Distance	1.5 m
Test Load	0.75 Ton
Number of Falls	1
Load Chain Dimension	5 mm
Weight	4 kg

*Cast iron handwheel is not available on ATH 0.5 model.



ATH 3

Capacity	3 Ton
Working Distance	1.5 m
Test Load	4.5 Ton
Number of Falls	1
Load Chain Dimension	10 mm
Weight	20 kg



ATH 0.7

Capacity	0.75 Ton
Working Distance	1.5 m
Test Load	1.05 Ton
Number of Falls	1
Load Chain Dimension	6 mm
Weight	7 kg



ATH 3-3

Capacity	3 Ton
Working Distance	3 m
Test Load	4.5 Ton
Number of Falls	1
Load Chain Dimension	10 mm
Weight	.. kg



ATH 1.5

Capacity	1.5 Ton
Working Distance	1.5 m
Test Load	2.25 Ton
Number of Falls	1
Load Chain Dimension	8 mm
Weight	15 kg



ATH 6

Capacity	6 Ton
Working Distance	1.5 m
Test Load	9 Ton
Number of Falls	2
Load Chain Dimension	10 mm
Weight	31 kg



ATH 1.5-3

Capacity	1.5 Ton
Working Distance	3 m
Test Load	2.25 Ton
Number of Falls	1
Load Chain Dimension	8 mm
Weight	.. kg



ATH 6-3

Capacity	6 Ton
Working Distance	3 m
Test Load	9 Ton
Number of Falls	2
Load Chain Dimension	10 mm
Weight	.. kg



ATH 9

Capacity	9 Ton
Working Distance	1.5 m
Test Load	13.5 Ton
Number of Falls	3
Load Chain Dimension	10 mm
Weight	43 kg



Shaft-Mounted Brake Disc



Hook Safety Latch



Safe Braking with Wide Brake Lining Diameter



Cast Handwheel



Extra Strength Reinforced Handle



Specially Treated Black Chain



Corrosion Resistant Bearing

ATH series Lever hoists are equipped with **specially treated black chain.**

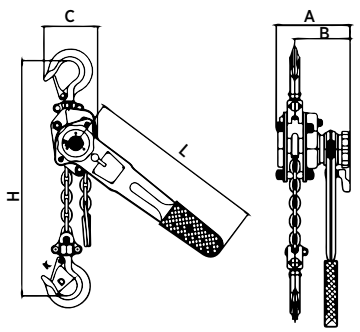

ATH 0.5

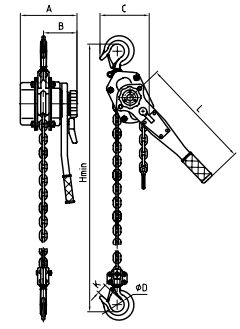

ATH 0.7, ATH 1.5, ATH 1.5-3, ATH 3, ATH 3-3

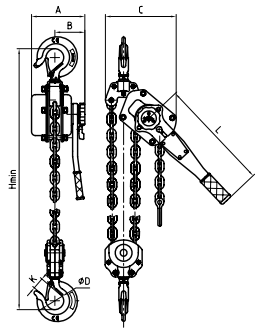

ATH 6, ATH 6-3

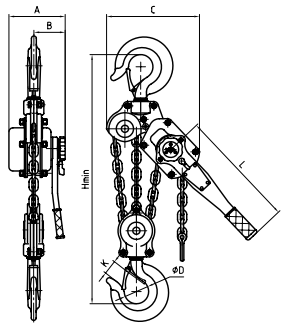

ATH 9

MODEL		ATH 0.5	ATH 0.7	ATH 1.5	ATH 1.5-3	ATH 3	ATH 3-3	ATH 6	ATH 6-3	ATH 9
Ölçüler	A	105 mm	148 mm	176 mm	176 mm	195 mm	195 mm	195 mm	195 mm	195 mm
	B	78 mm	88 mm	102 mm	102 mm	109 mm	109 mm	109 mm	109 mm	109 mm
	C	80 mm	135 mm	162 mm	162 mm	211 mm	211 mm	254 mm	254 mm	319 mm
	D	35 mm	37 mm	45 mm	45 mm	50 mm	50 mm	64 mm	64 mm	85 mm
	L	300 mm	290 mm	420 mm	420 mm	420 mm	420 mm	420 mm	420 mm	420 mm
	K	30 mm	26 mm	32.5 mm	32.5 mm	37 mm	37 mm	46 mm	46 mm	50 mm
	Hmin	260 mm	320 mm	380 mm	380 mm	480 mm	480 mm	620 mm	620 mm	700 mm

LOAD BRAKE LEVER HOISTS



ATSH 1.5

Capacity	1.5 Ton
Working Distance	1.5 m
Test Load	2.25 Ton
Number of Falls	1
Load Chain Dimension	8 mm
Weight	11.8 kg



ATSH 3

Capacity	3 Ton
Working Distance	1.5 m
Test Load	4.5 Ton
Number of Falls	1
Load Chain Dimension	10 mm
Weight	20.5 kg



ATSH 6

Capacity	6 Ton
Working Distance	1.5 m
Test Load	9 Ton
Number of Falls	2
Load Chain Dimension	10 mm
Weight	31.5 kg



ATSH 1.5-3

Capacity	1.5 Ton
Working Distance	3 m
Test Load	2.25 Ton
Number of Falls	1
Load Chain Dimension	8 mm
Weight	13.4 kg



ATSH 3-3

Capacity	3 Ton
Working Distance	3 m
Test Load	4.5 Ton
Number of Falls	1
Load Chain Dimension	10 mm
Weight	24.3 kg



ATSH 6-3

Capacity	6 Ton
Working Distance	3 m
Test Load	9 Ton
Number of Falls	2
Load Chain Dimension	10 mm
Weight	37.6 kg



Shaft-Mounted Brake Disc



Extra Strength Reinforced Handle



Cast Iron Handwheel



Hook Safety Latch



Specially Treated Black Chain



Overload Safety System



Safe Braking with Wide Brake Lining Diameter



Corrosion Resistant Bearing

ATSH series
Load Brake Lever Hoists
are equipped with overload protection for your safety. When a load exceeding the standard carrying capacity is applied, the safety system is activated and disables the pulling system for security.

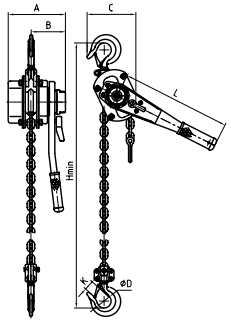

ATSH 1.5, ATSH 1.5-3
ATSH 3, ATSH 3-3

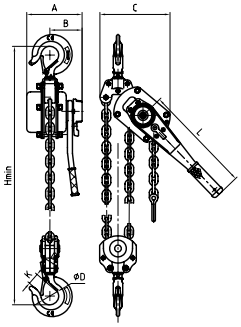

ATSH 6, ATSH 6-3

MODEL		ATSH 1.5	ATSH 1.5-3	ATSH 3	ATSH 3-3	ATSH 6	ATSH 6-3
Dim.	A	176 mm	176 mm	195 mm	195 mm	195 mm	195 mm
	B	102 mm	102 mm	109 mm	109 mm	109 mm	109 mm
	C	162 mm	162 mm	211 mm	211 mm	254 mm	254 mm
	D	45 mm	45 mm	50 mm	50 mm	64 mm	64 mm
	L	420 mm	420 mm	420 mm	420 mm	420 mm	420 mm
	K	32.5 mm	32.5 mm	37 mm	37 mm	46 mm	46 mm
	Hmin	380 mm	380 mm	480 mm	480 mm	620 mm	620 mm

WIRE ROPE PULLERS



ATHCH1

Capacity	1 Ton
Num. of Hooks	2
Rope Diameter	Ø 5
Weight	3.5 kg
Rope Lenght	1.5 m



ATHCH2

Capacity	2 Ton
Num. of Hooks	2
Rope Diameter	Ø 6
Weight	4.2 kg
Rope Lenght	1.5 m



ATHCH3

Capacity	3 Ton
Num. of Hooks	2
Rope Diameter	Ø 8
Weight	6 kg
Rope Lenght	1.5 m



ATHCH4

Capacity	4 Ton
Num. of Hooks	2
Rope Diameter	Ø 7
Weight	6.51 kg
Rope Lenght	1.5 m

- Provides long-lasting use with its robust structure.
- Has a simple operation for user comfort.
- Extra-strength ratchet handle is resistant to impacts and bending.



Long Life Steel Wire Rope



High Strength Hook

TROLLEYS



ATŞA 05

Capacity	0.5 Ton
NPI to Work On	100-140 mm
Weight	4.3 kg

ATŞA 1

	1 Ton
	140-180 mm
	7 kg

ATŞA 2

Capacity	2 Ton
NPI to Work On	160-220 mm
Weight	10.5 kg

ATŞA 3

	3 Ton
	180-240 mm
	15.3 kg

ATŞA 5

	5 Ton
	180-240 mm
	21.7 kg

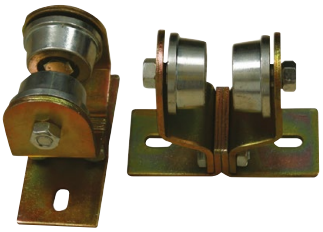

ATVŞA 1

Max. Capacity	1 Ton
NPI to Work On	80-120 mm
Weight	3.4 kg
Pcs. in Cartoon	2

* Suitable for use with mini electric wire rope hoists.



Sealed Bearings Robust Wheels



Robust Wheels With Sealed Bearings

MADE IN TÜRKİYE

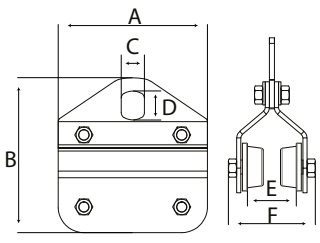

ATŞA 05, ATŞA 1, ATŞA 2 ATŞA 3, ATŞA 5

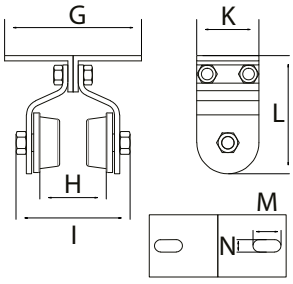

ATVŞA 1

MODEL		ATŞA 05	ATŞA 1	ATŞA 2	ATŞA 3	ATŞA 5
Dim.	A	180 mm	200 mm	220 mm	250 mm	280 mm
	B	195 mm	205 mm	240 mm	265 mm	285 mm
	C	28 mm	30 mm	40 mm	46 mm	48 mm
	D	35 mm	40 mm	50 mm	58 mm	60 mm
	E	58 mm	68 mm	76.5 mm	94 mm	99 mm
	F	105 mm	128 mm	151 mm	172 mm	182 mm

MODEL		ATVŞA 1
Ölçüler	G	132 mm
	H	57 mm
	I	105 mm
	K	60 mm
	L	114 mm
	M	27 mm
	N	12 mm

ATŞA series Trolleys are equipped, with maintenance-free wheel systems and sealed type bearing features. Does not require lubrication. Ball bearing wheels provide easy and smooth movement.

PLATE CLAMPS - VERTICAL / HORIZONTAL



VERTICAL	ATSK 1	ATSK 2	ATSK 3	ATSK 5
Max. Capacity	1 Ton	2 Ton	3 Ton	5 Ton
*Min. Capacity	0.1 Ton	0.2 Ton	0.3 Ton	0.5 Ton
Jaw Opening	0-20 mm	0-25 mm	0-30 mm	0-50 mm
Test Load	1.5 Ton	3 Ton	4.5 Ton	6.75 Ton
Weight	5 kg	8 kg	15 kg	23 kg

NEW PRODUCT	ATSK 8	ATSK 12	ATSK 16D
Max. Capacity	8 Ton	12 Ton	16 Ton
*Min. Capacity	0.8 Ton	1.2 Ton	1.6 Ton
Jaw Opening	0-45mm	50-90 mm	60-100 mm
Test Load	12 Ton	18 Ton	24 Ton
Weight	37 kg	50 kg	65 kg

* Minimum working load is 10% of the maximum working load.

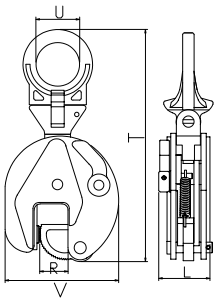


Robust Body


Replaceable Jaw Set

- Does not slip thanks to its tensioning mechanism..
- Can be locked in both open and closed positions.
- Not suitable for use with materials exceeding a temperature of 100°C.
- Not suitable for use with stainless steel or copper materials.

MODEL VERTICAL		ATSK 1	ATSK 2	ATSK 3	ATSK 5	ATSK 8	ATSK 12	ATSK 16D
Dim.	T	300 mm	385 mm	430 mm	500 mm	600 mm	700 mm	710 mm
	U	50 mm	68 mm	75 mm	68 mm	88 mm	90 mm	100 mm
	V	145 mm	175 mm	215 mm	232 mm	290 mm	420 mm	445 mm
	L	66 mm	75 mm	102 mm	112 mm	100 mm	112 mm	120 mm
	R(max)	20 mm	25 mm	30 mm	50 mm	45 mm	90 mm	100 mm

ATSK series Vertical Plate Clamps are used for the vertical lifting and transportation of steel plates and sheets, thanks to their tight-grip jaw structure.



HORIZONTAL	ATSK 0.8	ATSK 1.6	ATSK 3.2
Max. Capacity	0.8 Ton	1.6 Ton	3.2 Ton
*Min. Capacity	0.08 Ton	0.16 Ton	0.32 Ton
Jaw Opening	0-30 mm	0-45 mm	0-65 mm
Test Load	1.2 Ton	2.4 Ton	4.8 Ton
Weight	4 kg	6 kg	10.5 kg

* Minimum working load is 10% of the maximum working load.

- Thanks to its compact design, the jaw set can be easily replaced.
- The full jaw depth must be used when working with plate clamps.
- Not suitable for use with materials exceeding a temperature of 100°C.
- Not suitable for use with stainless steel or copper materials.

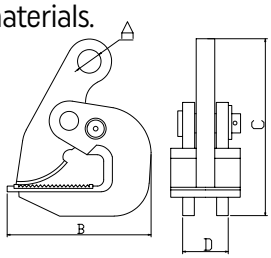

MODEL HORIZONTAL		ATSK 0.8	ATSK 1.6	ATSK 3.2
Dim.	A	30 mm	30 mm	37 mm
	B	148 mm	180 mm	210 mm
	C	205 mm	245 mm	308 mm
	D	45 mm	50 mm	62 mm
	R(max)	30 mm	45 mm	65 mm

ATSK series Horizontal Plate Clamps are used for the horizontal lifting and transportation of steel plates and sheets, thanks to their tight-grip jaw structure.


Robust Body


Replaceable Jaw Set

WIDE MOUTH PLATE CLAMP

NEW PRODUCT



ATGSK1

Capacity	1 Ton
Jaw Opening	0-15 mm
Test Load	1.5 Ton
Weight	2.5 kg

ATGSK2

Capacity	2 Ton
Jaw Opening	0-35 mm
Test Load	3 Ton
Weight	6.8 kg

ATGSK3

Capacity	3 Ton
Jaw Opening	0-50 mm
Test Load	4.5 Ton
Weight	18 kg

ATGSK5

Capacity	5 Ton
Jaw Opening	0-50 mm
Test Load	7.5 Ton
Weight	18 kg

ATGSK series Wide Mouth Plate Clamps offer safe use on thin sheets with their reverse jaw design.

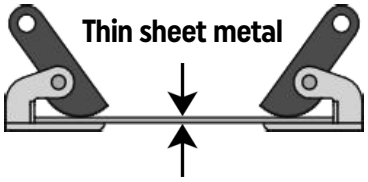

- **Ideal for lifting thin sheet metal.**



Reverse Jaw Design



Safe Use on Thin Sheets

- Offers safe operation thanks to its high-safety structure.
- Securely grips thin sheets during horizontal lifting.

HORIZONTAL PLATE CLAMP - NON-MARKING MODEL

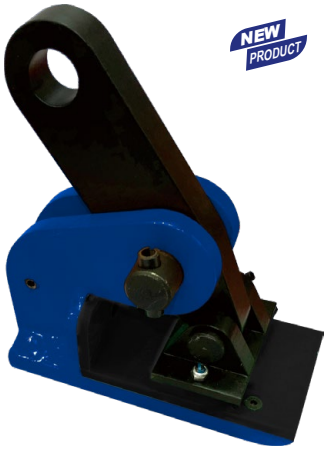

NEW PRODUCT



ATSKNMY1

Capacity	1 Ton
Jaw Opening	0-25 mm
Test Load	1.5 Ton
Weight	2.5 kg

ATSKNMY2

Capacity	2 Ton
Jaw Opening	0-45 mm
Test Load	3 Ton
Weight	8.5 kg

ATSKNMY3

Capacity	3 Ton
Jaw Opening	0-45 mm
Test Load	4.5 Ton
Weight	9 kg

ATSKNMY4

Capacity	4 Ton
Jaw Opening	0-50 mm
Test Load	6 Ton
Weight	15.5 kg

ATSKNMY6

Capacity	6 Ton
Jaw Opening	0-50 mm
Test Load	9 Ton
Weight	17.5 kg

MODEL	Maksimum Capacity	Jaw Opening	V (mm)	T (mm)	U (mm)	X (mm)	Net Weight
ATSKNMY1	1 Ton	0 - 25 mm	140 mm	20 mm	158 mm	65 mm	2.5 kg
ATSKNMY2	2 Ton	0 - 45 mm	225 mm	30 mm	235 mm	90 mm	8.5 kg
ATSKNMY3	3 Ton	0 - 45 mm	225 mm	30 mm	238 mm	90 mm	9 kg
ATSKNMY4	4 Ton	0 - 50 mm	250 mm	30 mm	257 mm	115 mm	15.5 kg
ATSKNMY6	6 Ton	0 - 50 mm	250 mm	30 mm	260 mm	130 mm	17.5 kg

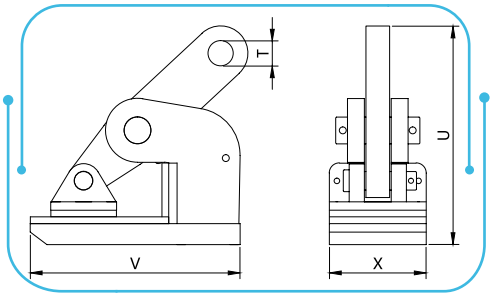

- Replaceable jaw system.
- Non-marking design for aluminum, stainless steel, wood, and marble materials.
- Offers safe operation thanks to its high-safety structure.
- Securely grips thin sheets during horizontal lifting.



Non-Marking Special Jaw



Robust Body

VERTICAL PLATE CLAMP - NON-MARKING MODEL

NEW PRODUCT



	ATSKNM1	ATSKNM2
Capacity	1 Ton	2 Ton
Jaw Opening	1-30 mm	1-50 mm
Test Load	1.5 Ton	3 Ton
Weight	6.5 kg	14 kg

Non-Marking Special Design

- Does not leave marks on the material surface thanks to its special jaw structure.
- Offers safe operation thanks to its high-security design.
- Non-marking design for aluminum, stainless steel, wood, and marble materials.
- Easily lifts various sheets thanks to its wide jaw opening.
- Prevents user error with its locking system.

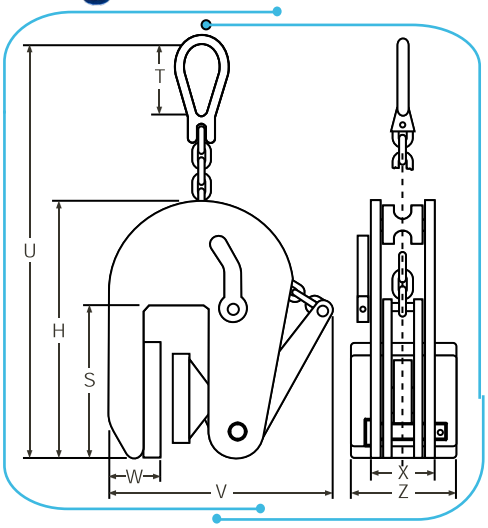



Non-Marking Special Jaw



Robust Body

ATSKNM and ATSKNMY series Plate Clamps do not leave marks on the transported products thanks to their special jaw design.

MODEL	Max. Capacity	Jaw Opening	Dimensions (mm)								Net Weight
			H	S	T	U	V	W	X	Z	
ATSKNM1	1 Ton	1- 30 mm	235	95	80	400	275	46	54	80	6.5 kg
ATSKNM2	2 Ton	1 - 50 mm	360	120	100	660	380	58	65	80	14 kg

PROFILE COVERS

NEW PRODUCT



	ATSK1PK	ATSK2PK
Capacity	1 Ton	2 Ton
I Beam Width	75-220 mm	75-220 mm
Test Load	1.5 Ton	3 Ton
Weight	3.8 kg	4.6 kg

	ATSK3PK	ATSK5PK
Capacity	3 Ton	5 Ton
I Beam Width	80-320 mm	80-320 mm
Test Load	4.5 Ton	7.5 Ton
Weight	9 kg	11 kg

ATSK-PK series Profile Clamps easily grip various profiles thanks to their wide jaw structure.



Special Design Jaw

- Provides a secure grip thanks to its high-safety structure.
- Offers easy gripping and operation.

MODEL		ATSK1PK	ATSK2PK	ATSK3PK	ATSK5PK
Dim.	A	260 mm	260 mm	354 mm	354 mm
	B	180-360 mm	180-360 mm	235-490 mm	235-490 mm
	C	64 mm	74 mm	103 mm	110 mm
	D	5 mm	6 mm	8 mm	10 mm
	E	215 mm	215 mm	260 mm	260 mm
	F	102-155 mm	102-155 mm	140-225 mm	140-225 mm
	G	25 mm	25 mm	45 mm	45 mm
	H	22 mm	22 mm	24 mm	28 mm

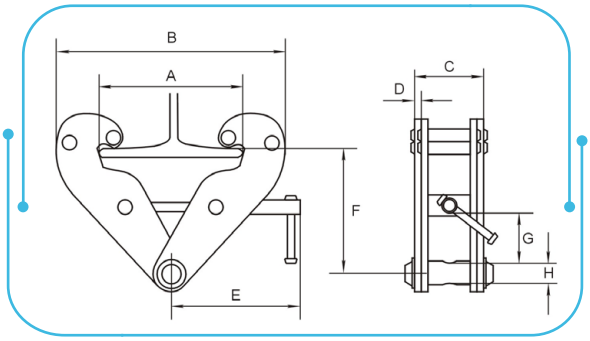

DRUM LIFTING SLINGS



ATVS1

Capacity	1 Ton
Jaw Opening	0 - 25 mm
Test Load	2 Ton
Number of Chain Falls	2
Weight	3.6 Kg
Chain Diameter Ø	6 mm
Chain Length	486 mm

- Provides convenience with various usage configurations.
- Capable of both single and double drum lifting.

Large Master Link Area

Special Alloy Chain

One-Touch Gripping

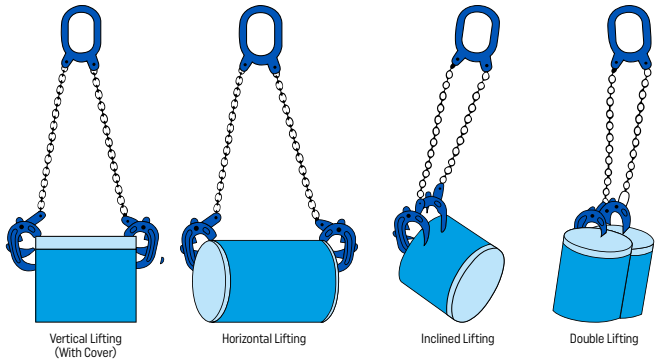

ATVS series Drum Lifters can lift drums of various sizes in single or double configurations.

PIPE CLAMPS





ATBK05

Capacity	0.5 Ton
Jaw Opening	50-100 mm
Test Load	1 Ton
Weight	3.2 kg

ATBK1

	1 Ton
	50-100 mm
	2 Ton
	4.1 kg

ATBK2

Capacity	2 Ton
Jaw Opening	80-130 mm
Test Load	4 Ton
Weight	16 kg

ATBK3

	3 Ton
	120-220 mm
	6 Ton
	32 kg

ATBK5

	5 Ton
	200-320 mm
	10 Ton
	104 kg

- Suitable for horizontal transportation of all types of cylindrical materials.
- 4-point clamping mechanism that prevents the load from swinging.
- Offers superior safety thanks to its safety latch.
- Occupies a very small footprint with its minimalist design.

Double Scissor System

Safety Latch

MODEL	A	B	C
ATBK05	50-100 mm	50 mm	12 mm
ATBK1	50-100 mm	50 mm	14 mm
ATBK2	80-130 mm	60 mm	18 mm
ATBK3	120-220 mm	68 mm	18 mm
ATBK5	200-320 mm	80 mm	25 mm

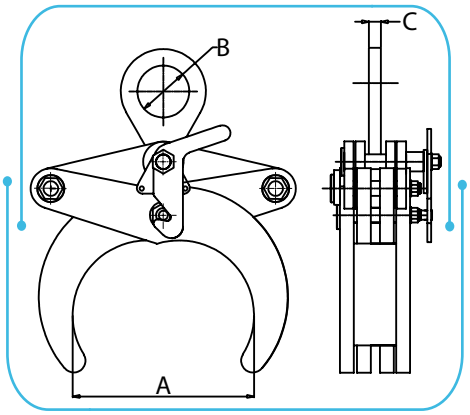

ATBK series Pipe Clamps offer the possibility to transport cylindrical bars and pipes.

CONCRETE PIPE CLAMPS



ATBBK	ATBBK15	ATBBK30	ATBBK30G
Max. Capacity	500 Kg	1 Tonn	1 Ton
Triple Max. Cap.	1.5 Ton	3 Ton	3 Ton
Throat Depth	165 mm	245 mm	245 mm
Jaw Opening	40 - 120 mm	50 - 180 mm	90 - 220 mm
Test Load	Solo: 750 Kg / 3Pc.: 2.25 Ton	Solo: 1.5 Ton / 3Pc.: 4.5 Ton	Solo: 1.5 Ton / 3Pc.: 4.5 Ton
Weight	Solo: 16 kg / 3Pc.: 48 kg	Solo: 20 kg / 3Pc.: 60 kg	Solo: 26 kg / 3Pc.: 78 kg

- **Concrete pipe clamps are sold individually and without chains.**
- **For safe lifting, they must be used as a set of three.**


Large Jaw Opening


Robust Knurled Jaw Structure

- Provides long-lasting use with its robust structure.
- Features a simple operation for user convenience.
- Easily grips various sizes of concrete thanks to its large jaw opening.
- Suitable for use with DIN 4034 concrete pipes.

ATBBK series Concrete Pipe Clamps provide a more comfortable grip with theirlarge jaw opening.

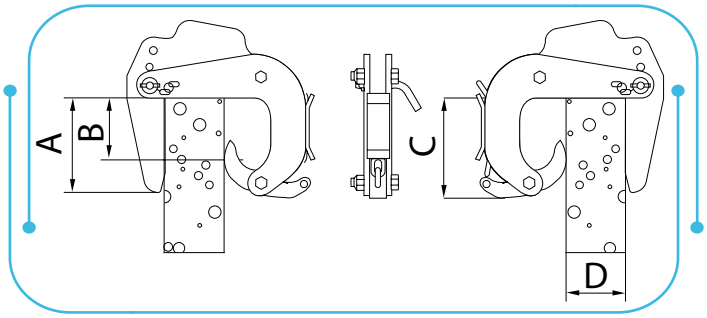

MODEL		ATBBK15	ATBBK30	ATBBK30G
Ölçüler	A	165 mm	245 mm	245 mm
	B	70 mm	100 mm	100 mm
	C	180 mm	310 mm	310 mm
	D	40-120 mm	50-180 mm	90-220 mm

RAIL CLAMPS



	ATRK 2	ATRK 4
Capacity	2 Ton	4 Ton
Jaw Opening	15-85 mm	10-95 mm
Test Load	3 Ton	6 Ton
Weight	6.2 kg	15 kg

MODEL		ATRK 2	ATRK 4
Dim.	A	15-85 mm	10-95 mm
	B(max)	174 mm	208 mm
	C(max)	320 mm	420 mm
	D	60 mm	76 mm
	E	111 mm	151 mm

ATRK series Rail Clamps are designed for lifting rails safely and securely.


Compact Design

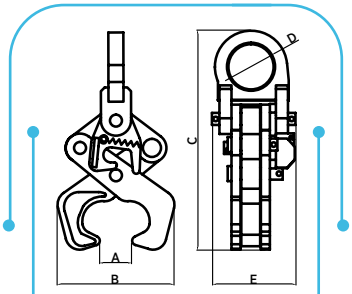

ATRK 2, ATRK 4

- Does not open even if the rail turns upside down, thanks to its high-security structure.
- Suitable for S49, S54, S60, and UIC60 rail sizes.

MAGNETIC LIFTERS



Magnetic lifters operate with a high-performance ferromagnetic system. The movement of the lever changes the magnetic force of the ferromagnetic system. They are used for transporting steel plates and other similar magnetic induction workpieces.

- ATMK series magnetic lifters offer the ability to operate within a range of -40°C to +80°C.

ATMK 01

Capacity (Flat Material)	100 kg
Capacity (Round Material)	50 kg
Test Load	350 kg
Weight	3 kg

ATMK 03

300 kg
150 kg
1050 kg
12 kg

ATMK 06

600 kg
300 kg
2100 kg
24 kg

ATMK 10

1000 kg
500 kg
3500 kg
43 kg

ATMK 15

Capacity (Flat Material)	1500 kg
Capacity (Round Material)	750 kg
Test Load	5000 kg
Weight	73 kg

ATMK 20

2000 kg
1000 kg
7000 kg
105 kg

ATMK 30

3000 kg
- kg
10500 kg
160 kg

ATMK 50

5000 kg
- kg
15000 kg
302 kg



Safety Lock Button



Swivel Hoist Ring

ROUND MATERIAL LIFTING CAPACITY TABLE			
MODEL	**D (mm)**	**N (°)**	**Max. Capacity**
ATMK 01	Ø45 - Ø90	145 °	50 kg
ATMK 03	Ø40 - Ø90	140 °	150 kg
ATMK 06	Ø35 - Ø110	135 °	300 kg
ATMK 10	Ø65 - Ø240	152 °	500 kg
ATMK 15	Ø90 - Ø470	161 °	750 kg
ATMK 20	Ø140 - Ø750	166 °	1000 kg

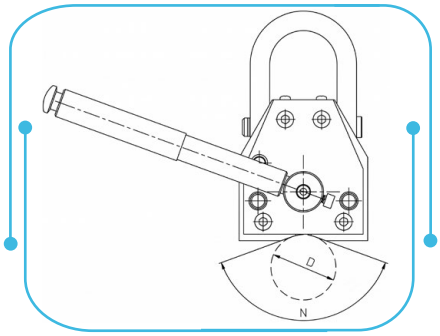

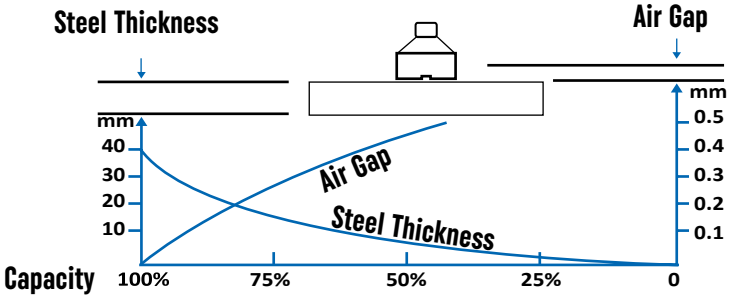

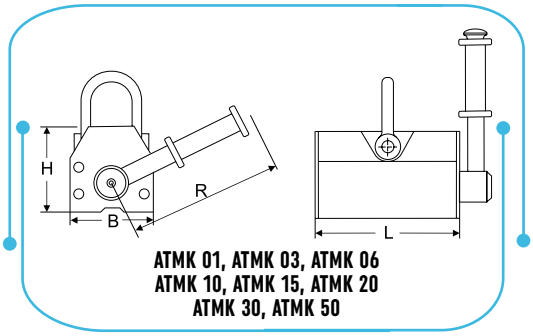

ATMK 01, ATMK 03, ATMK 06
ATMK 10, ATMK 15, ATMK 20
ATMK 30, ATMK 50

MODEL		ATMK 01	ATMK 03	ATMK 06	ATMK 10	ATMK 15	ATMK 20	ATMK 30	ATMK 50
Ölçüler	L	92 mm	166 mm	228 mm	266 mm	354 mm	394 mm	431 mm	522 mm
	B	64 mm	99 mm	118 mm	150 mm	168 mm	196 mm	234 mm	294 mm
	H	72 mm	108 mm	123 mm	158 mm	172 mm	204 mm	232 mm	289 mm
	R	148 mm	223 mm	257 mm	303 mm	464 mm	470 mm	576 mm	728 mm

WIRE ROPE HOIST SETS



ATT 0820

Capacity	0.8 Ton
Rope Length	20 m
Rope Diameter	8.3 mm
Test Load	1 Ton
Weight	13 kg
Body Type	Steel



ATT 1620

Capacity	1.6 Ton
Rope Length	20 m
Rope Diameter	11 mm
Test Load	2 Ton
Weight	26.5 kg
Body Type	Steel

ATT 1630

1.6 Ton	
30 m	
11 mm	
2 Ton	
30 kg	
Steel	

ATT 5420

Capacity	5.4 Ton
Rope Length	20 m
Rope Diameter	20 mm
Test Load	6.75 Ton
Weight	57 kg
Body Type	Alüminyum

ATT 3220

Capacity	3.2 Ton
Rope Length	20 m
Rope Diameter	16 mm
Test Load	4 Ton
Weight	48.5 kg
Body Type	Steel

ATT 3230

3.2 Ton	
30 m	
16 mm	
4 Ton	
58 kg	
Steel	

ATT 5430

Capacity	5.4 Ton
Rope Length	30 m
Rope Diameter	20 mm
Test Load	6.75 Ton
Weight	57 kg
Body Type	Aluminium

ATT series
Wire rope hoists
are mechanical tools used for the safe lifting and transport of heavy loads.



Strong Rope Structure



Spare Safety Pins in the Handle



Robust Body

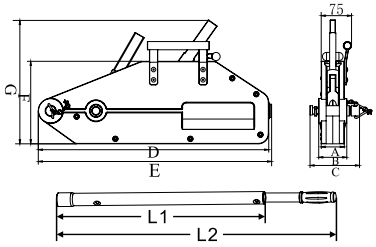

ATT 0820, ATT 1620, ATT 1630, ATT 3220, ATT 3230, ATT 5420, ATT 5430

MODEL		ATT 0820	ATT 1620 ATT 1630	ATT 3220 ATT 3230	ATT 5420 ATT 5430
Dim.	A	38 mm	51 mm	61 mm	90 mm
	B	53 mm	68 mm	89 mm	160 mm
	C	90 mm	110 mm	135 mm	200 mm
	D	430 mm	550 mm	640 mm	935 mm
	E	440 mm	550 mm	655 mm	940 mm
	F	172 mm	185 mm	230 mm	300 mm
	G	245 mm	286 mm	345 mm	410 mm
	L1	40 cm	60 cm	60 cm	88 cm
	L2	41 cm	61 cm	61 cm	135 cm

HYDRAULIC BOTTLE JACKS



ATŞK 2

Capacity	2 Ton
Minimum Height	158 mm
Lifting Height	90 mm
Adjustable Height	60 mm
Maximum Height	308 mm
Weight	2.25 kg

ATŞK 3

3 Ton	
195 mm	
125 mm	
60 mm	
380 mm	
3.2 kg	

ATŞK 5

5 Ton	
197 mm	
125 mm	
60 mm	
382 mm	
4.1 kg	

ATŞK 10

Capacity	10 Ton
Minimum Height	205 mm
Lifting Height	125 mm
Adjustable Height	60 mm
Maximum Height	390 mm
Weight	5.6 kg

ATŞK 15

15 Ton	
225 mm	
140 mm	
60 mm	
425 mm	
7.8 kg	

ATŞK 20

20 Ton	
244 mm	
145 mm	
60 mm	
449 mm	
10.2 kg	

ATŞK 32

Capacity	32 Ton
Minimum Height	285 mm
Lifting Height	180 mm
Adjustable Height	-
Maximum Height	465 mm
Weight	14 kg

ATŞK 50

50 Ton	
300 mm	
180 mm	
-	
480 mm	
30 kg	

ATŞK 100

100 Ton	
335 mm	
180 mm	
-	
520 mm	
78 kg	



Stable Base Plate



Load Safety Valve



Removable Pump Handle

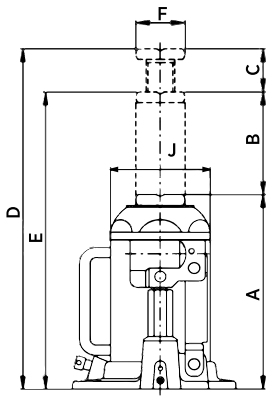

ATŞK 2, ATŞK 3, ATŞK 5, ATŞK 10, ATŞK 15, ATŞK 20, ATŞK 32, ATŞK 50, ATŞK 100

ATŞK series Hydraulic Bottle Jacks are designed for vehicle repair and lifting components. With their heavy-duty construction, they offer high stability, durability, and a long service life.

MODEL		ATŞK 2	ATŞK 3	ATŞK 5	ATŞK 10	ATŞK 15	ATŞK 20	ATŞK 32	ATŞK 50	ATŞK 100
Dim.	A	158 mm	195 mm	197 mm	205 mm	225 mm	244 mm	285 mm	295 mm	335 mm
	B	90 mm	125 mm	125 mm	125 mm	140 mm	145 mm	180 mm	180 mm	180 mm
	C	60 mm	60 mm	60 mm	60 mm	60 mm	60 mm	60 mm	60 mm	60 mm
	D	308 mm	380 mm	382 mm	390 mm	425 mm	449 mm	465 mm	475 mm	515 mm
	E	248 mm	320 mm	322 mm	330 mm	365 mm	389 mm	465 mm	475 mm	515 mm
	F	21 mm	26 mm	30 mm	36 mm	43 mm	46 mm	54 mm	83 mm	117 mm
	G	88 mm	103 mm	115 mm	126 mm	140 mm	155 mm	170 mm	176 mm	260 mm
	H	94 mm	108 mm	114 mm	127 mm	141 mm	166 mm	171 mm	218 mm	240 mm
	J	51 mm	60 mm	70 mm	80 mm	95 mm	114 mm	121 mm	168 mm	231 mm

MECHANICAL JACKS (TRACK JACKS)



ATPK 3

Capacity	3 Ton
Stroke	70 - 730 mm
Force	280 N
Test Load	3.6 Ton
Weight	21.2 Kg



ATPK 5

Capacity	5 Ton
Stroke	80 - 730 mm
Force	280 N
Test Load	6.1 Ton
Weight	28.5 kg



ATPK 10

Capacity	10 Ton
Stroke	85 - 800 mm
Force	560 N
Test Load	12.2 Ton
Weight	46.8 kg



ATPK 16

Capacity	16 Ton
Stroke	95 - 800 mm
Force	640 N
Test Load	19.6 Ton
Weight	65 kg



ATPK 20

Capacity	20 Ton
Stroke	100 - 860 mm
Force	640 N
Test Load	24.5 Ton
Weight	75 kg



Stable Base Plate



Robust Gearbox

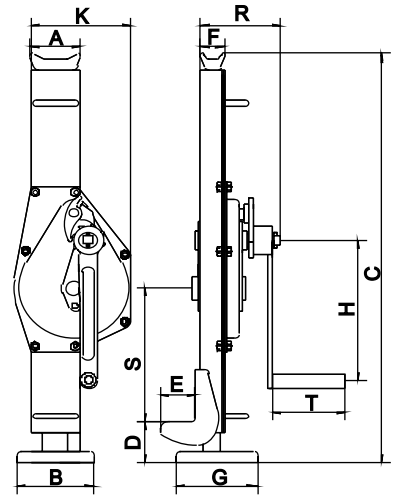

ATPK 3, ATPK 5, ATPK 10, ATPK 16, ATPK 20

ATPK series Mechanical Jacks offer high stability thanks to their heavy-duty construction. They are durable and long-lasting, making them ideal for lifting loads with a ground clearance of 72 cm or higher.

MODEL		ATPK 3	ATPK 5	ATPK 10	ATPK 16	ATPK 20
Dim.	A	197 mm	189 mm	250 mm	275 mm	275 mm
	B	200 mm	239 mm	293 mm	320 mm	335 mm
	C	296 mm	335 mm	498 mm	514 mm	529 mm
	D	130 mm	140 mm	140 mm	150 mm	150 mm
	E	60 mm	71 mm	86 mm	78 mm	78 mm
	G	140 mm	170 mm	170 mm	180 mm	180 mm
	K	127 mm	127 mm	248 mm	250 mm	250 mm
	R	250 mm	275 mm	300 mm	300 mm	380 mm

HYDRAULIC TOE JACKS



ATM 50

Capacity	5 Ton
Toe Lifting Range	20-230 mm
Head Lifting Range	368-573 mm
Weight	25 kg



ATM 100

Capacity	10 Ton
Toe Lifting Range	30-260 mm
Head Lifting Range	420-650 mm
Weight	35 kg



ATM 250

Capacity	25 Ton
Toe Lifting Range	58-273 mm
Head Lifting Range	505-720 mm
Weight	102 kg



Stable Base Plate



Removable Pump Handle



Robust Hydraulic System

ATM series
Joe Jacks are designed for lifting heavy and bulky machinery. The lowering speed can be precisely adjusted, and they feature built-in overload protection.

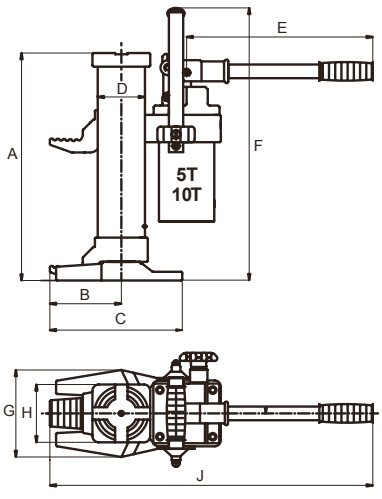

ATM 50, ATM 100

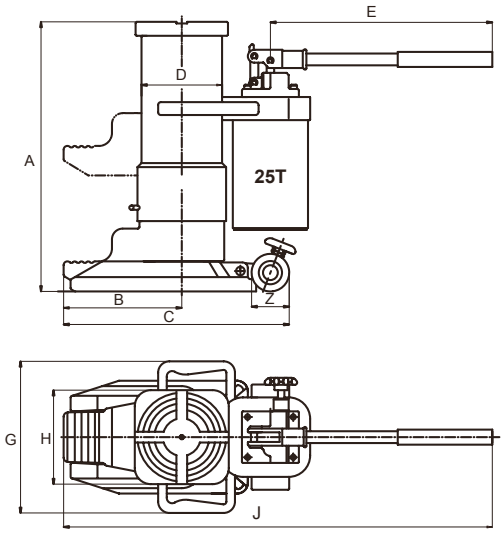

ATM 250

MODEL		ATM 50	ATM 100
Dim.	A	368-573 mm	420-650 mm
	B	115 mm	120 mm
	C	213 mm	205 mm
	D	76 mm	91 mm
	E	520 mm	520 mm
	F	438 mm	494 mm
	G	140 mm	170 mm
	H	93 mm	108 mm
	J	740 mm	745 mm

MODEL		ATM 250
Dim.	A	505-720 mm
	B	220 mm
	C	420 mm
	D	155 mm
	E	840-920mm
	Z	70 mm
	G	283 mm
	H	210 mm
	J	1225-1305 mm

ELECTRIC CHAIN HOIST (380 VOLT)



ATZCE 05

Capacity	0.5 Ton
Lifting Height	6 m
FEM/ISO Class	1Bm/M3
Number of Chain Falls	1
Motor Power	1.1 kW
Load Chain Dimensions	6.3 mm
Lifting Speed	7.2 m/min
Protection Class	IP 54
Weight	47 kg



ATZCE 1

Capacity	1 Ton
Lifting Height	6 m
FEM/ISO Class	1Bm/M3
Number of Chain Falls	1
Motor Power	1.5 kW
Load Chain Dimensions	7.1 mm
Lifting Speed	6.8 m/min
Protection Class	IP 54
Weight	65 kg



ATZCE 1-12

Capacity	1 Ton
Lifting Height	12 m
FEM/ISO Class	1Bm/M3
Number of Chain Falls	1
Motor Power	1.5 kW
Load Chain Dimensions	7.1 mm
Lifting Speed	6.8 m/min
Protection Class	IP 54
Weight	68 kg



ATZCE 2

Capacity	2 Ton
Lifting Height	6 m
FEM/ISO Class	1Bm/M3
Number of Chain Falls	1
Motor Power	3.0 kW
Load Chain Dimensions	10 mm
Lifting Speed	6.6 m/min
Protection Class	IP 54
Weight	108 kg



ATZCE 2-12

Capacity	2 Ton
Lifting Height	12 m
FEM/ISO Class	1Bm/M3
Number of Chain Falls	1
Motor Power	3.0 kW
Load Chain Dimensions	10 mm
Lifting Speed	6.6 m/min
Protection Class	IP 54
Weight	118 kg



ATZCE 3

Capacity	3 Ton
Lifting Height	6 m
FEM/ISO Class	1Bm/M3
Number of Chain Falls	1
Motor Power	3.0 kW
Load Chain Dimensions	11.2 mm
Lifting Speed	5.6 m/min
Protection Class	IP 54
Weight	115 kg



ATZCE 3-12

Capacity	3 Ton
Lifting Height	12 m
FEM/ISO Class	1Bm/M3
Number of Chain Falls	1
Motor Power	3.0 kW
Load Chain Dimensions	11.2 mm
Lifting Speed	5.6 m/min
Protection Class	IP 54
Weight	126 kg



ATZCE 5

Capacity	5 Ton
Lifting Height	6 m
FEM/ISO Class	1Bm/M3
Number of Chain Falls	2
Motor Power	3.0 kW
Load Chain Dimensions	11.2 mm
Lifting Speed	2.8 m/min
Protection Class	IP 54
Weight	144 kg



ATZCE 10

Capacity	10 Ton
Lifting Height	6 m
FEM/ISO Class	1Bm/M3
Number of Chain Falls	4
Motor Power	2 x 3.0 kW
Load Chain Dimensions	11.2 mm
Lifting Speed	2.8 m/min
Protection Class	IP 54
Weight	330 kg

WIRELESS CRANE REMOTE CONTROL



ATZCE-C4S

Voltaj	AC/DC 18-65 V

***Compatible with single-speed models.**

- Phase protection feature prevents damage from incorrect electrical connections.

IP54 Protection Class



Cooling-Fin Body



High Quality Forged Steel Hook

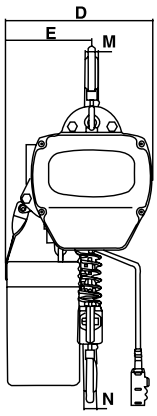

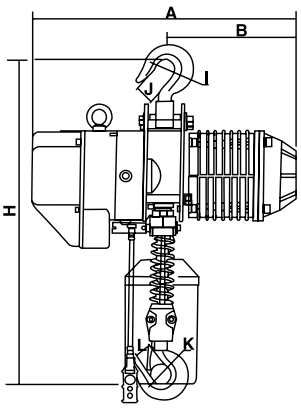

ATZCE 05, ATZCE 1, ATZCE 2, ATZCE 3, ATZCE 1-12, ATZCE 2-12, ATZCE 3-12, ATZCE 5

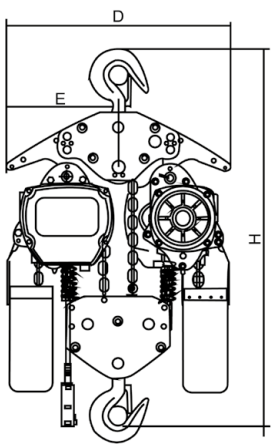

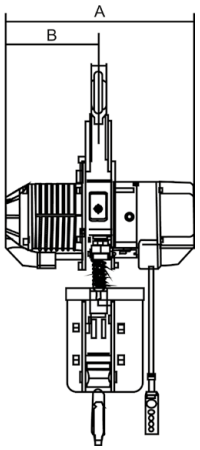

ATZCE10

MODEL		ATZCE 05	ATZCE 1	ATZCE 2	ATZCE 3	ATZCE 1-12	ATZCE 2-12	ATZCE 3-12	ATZCE 5	ATZCE 10
Dim	A	460 mm	520 mm	615 mm	615 mm	520 mm	615 mm	615 mm	615 mm	630 mm
	B	230 mm	260 mm	295 mm	295 mm	260 mm	295 mm	295 mm	295 mm	315 mm
	D	288 mm	300 mm	430 mm	430 mm	300 mm	430 mm	430 mm	430 mm	890 mm
	E	165 mm	176 mm	265 mm	265 mm	176 mm	265 mm	265 mm	325 mm	445 mm
	I	31 mm	42 mm	49 mm	59 mm	42 mm	49 mm	59 mm	60 mm	-
	J	29 mm	32 mm	40 mm	48 mm	32 mm	40 mm	48 mm	48 mm	-
	K	31 mm	42 mm	49 mm	59 mm	42 mm	49 mm	59 mm	60 mm	-
	L	29 mm	32 mm	40 mm	48 mm	32 mm	40 mm	48 mm	48 mm	-
	M	20 mm	24 mm	30 mm	35 mm	24 mm	30 mm	35 mm	43 mm	-
	N	20 mm	24 mm	30 mm	35 mm	24 mm	30 mm	35 mm	43 mm	-
	Hmin	530 mm	650 mm	800 mm	845 mm	650 mm	800 mm	845 mm	1030 mm	1400 mm

DOUBLE SPEED ELECTRIC CHAIN HOIST (380 V - 50 Hz)



ATZCE 05D

Capacity	0.5 Ton
Lifting Height	6 m
FEM/ISO Class	1Bm/M3
Number of Chain Falls	1
Motor Power	1.1 / 0.37 kW
Load Chain Dimensions	6.3 mm
Lifting Speed	8.6 / 2.9 m/dk
Protection Class	IP 54
Weight	55 kg



ATZCE 1D

Capacity	1 Ton
Lifting Height	6 m
FEM/ISO Class	1Bm/M3
Number of Chain Falls	1
Motor Power	1.5 / 0.5 kW
Load Chain Dimensions	7.1 mm
Lifting Speed	8.2 / 2.8 m/dk
Protection Class	IP 54
Weight	74 kg



ATZCE 2D

Capacity	2 Ton
Lifting Height	6 m
FEM/ISO Class	1Bm/M3
Number of Chain Falls	1
Motor Power	3.0 / 1.0 kW
Load Chain Dimensions	10 mm
Lifting Speed	7.9 / 2.6 m/dk
Protection Class	IP 54
Weight	128 kg



ATZCE 3D

Capacity	3 Ton
Lifting Height	6 m
FEM/ISO Class	1Bm/M3
Number of Chain Falls	1
Motor Power	3.0 / 1.0 kW
Load Chain Dimensions	11.2 mm
Lifting Speed	6.7 / 2.2 m/dk
Protection Class	IP 54
Weight	137 kg

IP54 Protection Class



Cooling-Fin Body



High Quality Forged Steel Hook



Dual Speed Settings

- Phase protection feature prevents incorrect electrical connections.
- Dual speed option allows for precise lifting operations.

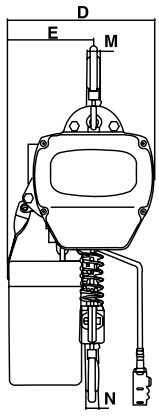

ATZCE05D, ATZCE1D, ATZCE2D, ATZCE3D

MODEL		ATZCE 05D	ATZCE 1D	ATZCE 2D	ATZCE 3D
Dim.	A	545 mm	582 mm	670 mm	670 mm
	B	260 mm	280 mm	313 mm	313 mm
	D	288 mm	300 mm	430 mm	430 mm
	E	165 mm	176 mm	265 mm	265 mm
	I	31 mm	42 mm	49 mm	59 mm
	J	29 mm	32 mm	40 mm	48 mm
	K	31 mm	42 mm	49 mm	59 mm
	L	29 mm	32 mm	40 mm	48 mm
	M	20 mm	24 mm	30 mm	35 mm
	N	20 mm	24 mm	30 mm	35 mm
	Hmin	530 mm	650 mm	800 mm	845 mm

SHIP-MOUNTED DOUBLE-SPEED ELECTRIC CHAIN WINCH (440 V - 60 Hz)



ATZCE 05GH

Capacity	0.5 Ton
Lifting Height	6 m
FEM/ISO Class	1Bm/M3
Number of Chain Falls	1
Motor Power	1.1 / 0.37 kW
Load Chain Dimensions	6.3 mm
Lifting Speed	8.6 / 2.9 m/min
Protection Class	IP 54
Weight	55 kg



ATZCE 1GH

Capacity	1 Ton
Lifting Height	6 m
FEM/ISO Class	1Bm/M3
Number of Chain Falls	1
Motor Power	1.5 / 0.5 kW
Load Chain Dimensions	7.1 mm
Lifting Speed	8.2 / 2.8 m/min
Protection Class	IP 54
Weight	74 kg



ATZCE 2GH

Capacity	2 Ton
Lifting Height	6 m
FEM/ISO Class	1Bm/M3
Number of Chain Falls	1
Motor Power	3.0 / 1.0 kW
Load Chain Dimensions	10 mm
Lifting Speed	7.9 / 2.6 m/min
Protection Class	IP 54
Weight	128 kg

IP54 Protection Class



Cooling-Fin Body



High Quality Forged Steel Hook



Dual Speed Settings

- Compatible with 440 V - 60 Hz electricity for ships.
- Phase protection feature prevents incorrect electrical connections.
- Dual speed option allows for precise lifting operations.

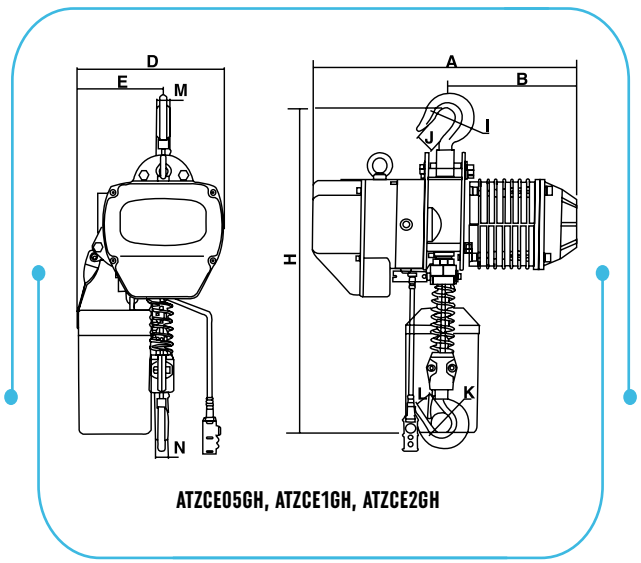

ATZCE05GH, ATZCE1GH, ATZCE2GH

MODEL		ATZCE 05GH	ATZCE 1GH	ATZCE 2GH
Dim.	A	545 mm	582 mm	670 mm
	B	260 mm	280 mm	313 mm
	D	288 mm	300 mm	430 mm
	E	165 mm	176 mm	265 mm
	I	31 mm	42 mm	49 mm
	J	29 mm	32 mm	40 mm
	K	31 mm	42 mm	49 mm
	L	29 mm	32 mm	40 mm
	M	20 mm	24 mm	30 mm
	N	20 mm	24 mm	30 mm
	Hmin	530 mm	650 mm	800 mm

ELECTRIC TROLLEYS (380 VOLT)

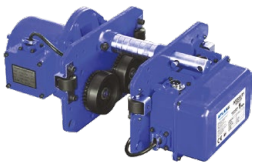

ATZCE-T1

Capacity	1 Ton
Motor Power	0.4 kW
Travel Speed on Rail	11 m/min
NPI Beam Dimensions	75-178 mm
Weight	32 kg

ATZCE-T2

Capacity	2 Ton
Motor Power	0.4 kW
Travel Speed on Rail	11 m/min
NPI Beam Dimensions	82-178 mm
Weight	38 kg

ATZCE-T3

Capacity	3 Ton
Motor Power	0.75 kW
Travel Speed on Rail	11 m/min
NPI Beam Dimensions	100-178 mm
Weight	50 kg

ELECTRIC DOUBLE SPEED TROLLEYS (380 VOLT)

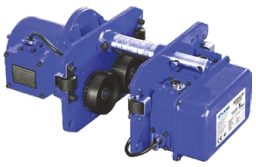

ATZCE-T1D

Capacity	1 Ton
Motor Power	0.4/0.1 kW
Travel Speed on Rail	20/5 m/min
NPI Beam Dimensions	75-178 mm
Weight	37 kg

ATZCE-T2D

Capacity	2 Ton
Motor Power	0.4/0.1 kW
Travel Speed on Rail	20/5 m/min
NPI Beam Dimensions	82-178 mm
Weight	43 kg

ATZCE-T3D

Capacity	3 Ton
Motor Power	0.8/0.2 kW
Travel Speed on Rail	20/5 m/min
NPI Beam Dimensions	100-178 mm
Weight	60 kg



Balanced Construction



Vibration-Free Travel



Compact Design

IP54 Protection Class

ATZCE-T series electric trolleys enable horizontal movement on an, " I " beam.

MODEL		ATZCE-T1	ATZCE-T2	ATZCE-T3	ATZCE-T1D	ATZCE-T2D	ATZCE-T3D
Dim.	A	315 mm	325 mm	340 mm	315 mm	325 mm	340 mm
	B	205 mm	217 mm	250 mm	210 mm	220 mm	250 mm
	C	207 mm	237 mm	237 mm	206 mm	237 mm	264 mm
	D	113 mm	127 mm	127 mm	111 mm	127 mm	140 mm
	R	142 mm	142 mm	142 mm	276 mm	276 mm	310 mm
	T	231 mm	231 mm	231 mm	149 mm	149 mm	149 mm

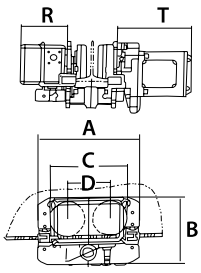

ATZCE-T1, ATZCE-T2, ATZCE-T3
ATZCE-T1D, ATZCE-T2D, ATZCE-T3D

4-MOTION ELECTRIC CHAIN HOIST (380 VOLT)



ATZCE 05-4

Hoist Code	ATZCE 05
Capacity	0.5 Ton
Lifting Height	6 m
FEM/ISO Class	1Bm/M3
Number of Chain Falls	1
Motor Power	1.1 kW
Load Chain Dimensions	6.3 mm
Lifting Speed	7.2 m/min
Protection Class	IP 54
Weight	47kg

+

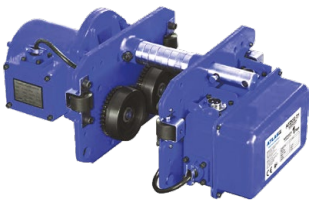

Trolley Code	ATZCE-T1
Capacity	1 Ton
Motor Power	0.4 kW
Travel Speed on Rail	11 m/min
Weight	32 kg

4-MOTION ELECTRIC CHAIN HOIST (380 VOLT)



ATZCE 1-4

Hoist Code	ATZCE 1
Capacity	1 Ton
Lifting Height	6 m
FEM/ISO Class	1Bm/M3
Number of Chain Falls	1
Motor Power	1.5 kW
Load Chain Dimensions	7.1 mm
Lifting Speed	6.8 m/dk
Protection Class	IP 54
Weight	65 kg

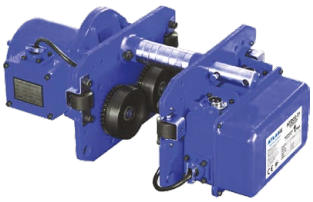

Trolley Code	ATZCE-T1
Capacity	1 Ton
Motor Power	0.4 kW
Travel Speed on Rail	11 m/min
Weight	32 kg



ATZCE 2-4

Hoist Code	ATZCE 2
Capacity	2 Ton
Lifting Height	6 m
FEM/ISO Class	1Bm/M3
Number of Chain Falls	1
Motor Power	3.0 kW
Load Chain Dimensions	10 mm
Lifting Speed	6.6 m/dk
Protection Class	IP 54
Weight	108 kg

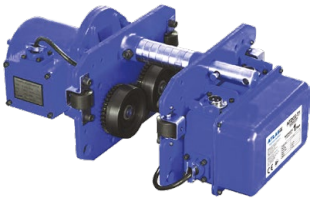

Trolley Code	ATZCE-T2
Capacity	2 Ton
Motor Power	0.4 kW
Travel Speed on Rail	11 m/min
Weight	38 kg



ATZCE 3-4

Hoist Code	ATZCE 3
Capacity	3 Ton
Lifting Height	6 m
FEM/ISO Class	1Bm/M3
Number of Chain Falls	1
Motor Power	3.0 kW
Load Chain Dimensions	11.2 mm
Lifting Speed	5.6 m/dk
Protection Class	IP 54
Weight	115 kg

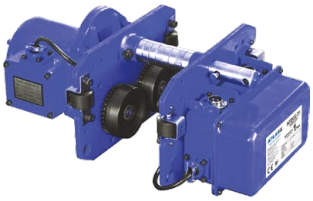

Trolley Code	ATZCE-T3
Capacity	3 Ton
Motor Power	0.75 kW
Travel Speed on Rail	11 m/min
Weight	50 kg



ATZCE 1-12-4

Hoist Code	ATZCE 1
Capacity	1 Ton
Lifting Height	12 m
FEM/ISO Class	1Bm/M3
Number of Chain Falls	1
Motor Power	1.5 kW
Load Chain Dimensions	7.1 mm
Lifting Speed	6.8 m/dk
Protection Class	IP 54
Weight	68 kg

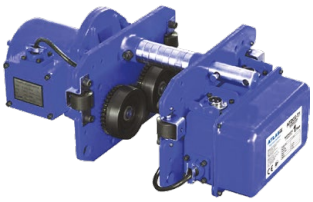

Trolley Code	ATZCE-T1
Capacity	1 Ton
Motor Power	0.4 kW
Travel Speed on Rail	11 m/min
Weight	32 kg

4-MOTION ELECTRIC CHAIN HOIST (380 VOLT)



ATZCE 2-12-4

Hoist Code	ATZCE 2
Capacity	2 Ton
Lifting Height	12 m
FEM/ISO Class	2500 kg
Number of Chain Falls	1
Motor Power	3.0 kW
Load Chain Dimensions	10 mm
Lifting Speed	6.6 m/min
Protection Class	IP 54
Weight	118 kg

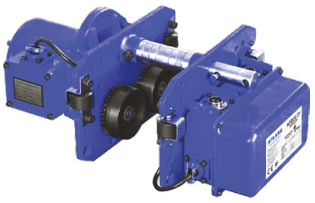

Trolley Code	ATZCE-T2
Capacity	2 Ton
Motor Power	0.4 kW
Travel Speed on Rail	11 m/min
Weight	38 kg



ATZCE 3-12-4

Hoist Code	ATZCE 3
Capacity	3 Ton
Lifting Height	12 m
FEM/ISO Class	3750 kg
Number of Chain Falls	1
Motor Power	3.0 kW
Load Chain Dimensions	11.2 mm
Lifting Speed	5.6 m/min
Protection Class	IP 54
Weight	126 kg

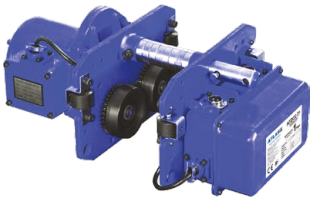

Trolley Code	ATZCE-T3
Capacity	3 Ton
Motor Power	0.75 kW
Travel Speed on Rail	11 m/min
Weight	50 kg

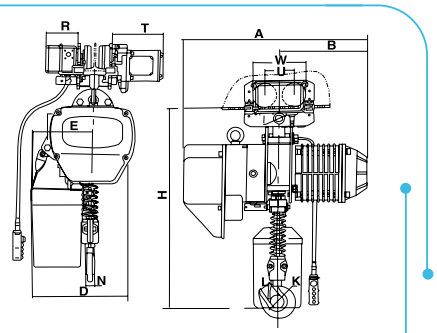

ATZCE 05-4, ATZCE 1-4, ATZCE 2-4, ATZCE 3-4
ATZCE 1-12-4, ATZCE 2-12-4, ATZCE 3-12-4

MODEL		ATZCE 05-4	ATZCE 1-4	ATZCE 2-4	ATZCE 3-4	ATZCE 1-12-4	ATZCE 2-12-4	ATZCE 3-12-4
Dim.	A	460 mm	520 mm	615 mm	615 mm	520 mm	615 mm	615 mm
	B	230 mm	260 mm	295 mm	295 mm	260 mm	295 mm	295 mm
	D	288 mm	300 mm	430 mm	430 mm	300 mm	430 mm	430 mm
	E	165 mm	176 mm	265 mm	265 mm	176 mm	265 mm	265 mm
	I	31 mm	31 mm	36 mm	43 mm	31 mm	36 mm	43 mm
	K	31 mm	42 mm	49 mm	59 mm	42 mm	49 mm	59 mm
	L	29 mm	32 mm	40 mm	48 mm	32 mm	40 mm	48 mm
	N	20 mm	24 mm	30 mm	35 mm	24 mm	30 mm	35 mm
	W	180 mm	207 mm	237 mm	265 mm	207 mm	237 mm	265 mm
	U	100 mm	113 mm	127 mm	140 mm	113 mm	127 mm	140 mm
	R	140 mm	142 mm	142 mm	142 mm	142 mm	142 mm	142 mm
	T	159 mm	231 mm	231 mm	231 mm	231 mm	231 mm	231 mm
	Hmin	635 mm	650 mm	815 mm	830 mm	650 mm	815 mm	830 mm

DOUBLE SPEED ELECTRIC CHAIN HOIST (380 V - 50 Hz)



ATZCE 05D-4

Hoist Code	**ATZCE 2D**
Capacity	0.5 Ton
Lifting Height	6 m
FEM/ISO Class	1Bm/M3
Number of Chain Falls	1
Motor Power	1.1 / 0.37 kW
Load Chain Dimensions	6.3 mm
Lifting Speed	8.6 / 2.9 m/min
Protection Class	IP 54
Weight	55 kg

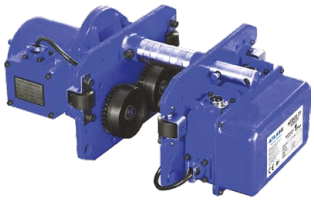

Şaryo Kodu	**ATZCE-T1D**
Kapasite	1 Ton
Motor Gücü	0.4/0.1 kW
Rayda Yürüme Hızı	20/5 m/dk
NPI Profil Ölçüleri	75-178 mm
Ağırlık	37 kg



ATZCE 1D-4

Hoist Code	**ATZCE 2D**
Capacity	1 Ton
Lifting Height	6 m
FEM/ISO Class	1Bm/M3
Number of Chain Falls	1
Motor Power	1.5 / 0.5 kW
Load Chain Dimensions	7.1 mm
Lifting Speed	8.2 / 2.8 m/min
Protection Class	IP 54
Weight	74 kg

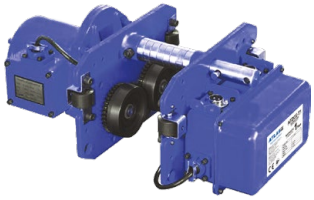

Şaryo Kodu	**ATZCE-T1D**
Kapasite	1 Ton
Motor Gücü	0.4/0.1 kW
Rayda Yürüme Hızı	20/5 m/dk
NPI Profil Ölçüleri	75-178 mm
Ağırlık	37 kg



ATZCE 2D-4

Hoist Code	**ATZCE 2D**
Capacity	2 Ton
Lifting Height	6 m
FEM/ISO Class	1Bm/M3
Number of Chain Falls	1
Motor Power	3.0 / 1.0 kW
Load Chain Dimensions	10 mm
Lifting Speed	7.9 / 2.6 m/min
Protection Class	IP 54
Weight	128 kg

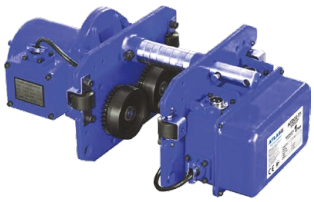

Şaryo Kodu	**ATZCE-T2D**
Kapasite	2 Ton
Motor Gücü	0.4/0.1 kW
Rayda Yürüme Hızı	20/5 m/dk
NPI Profil Ölçüleri	82-178 mm
Ağırlık	43 kg



ATZCE 3D-4

Hoist Code	**ATZCE 3D**
Capacity	3 Ton
Lifting Height	6 m
FEM/ISO Class	1Bm/M3
Number of Chain Falls	1
Motor Power	3.0 / 1.0 kW
Load Chain Dimensions	11.2 mm
Lifting Speed	6.7 / 2.2 m/min
Protection Class	IP 54
Weight	137 kg

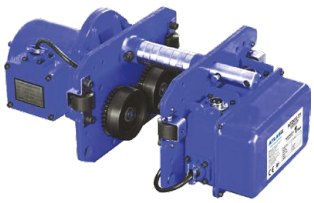

Şaryo Kodu	**ATZCE-T3D**
Kapasite	3 Ton
Motor Gücü	0.8/0.2 kW
Rayda Yürüme Hızı	20/5 m/dk
NPI Profil Ölçüleri	100-178 mm
Ağırlık	60 kg

LOW CEILING 4-MOVE ELECTRIC CHAIN HOIST (380 VOLT)



ATZCE 1A

Hoist Code	ATZCE 1
Trolley Code	ATZCE-T1
Capacity	1 Ton
Lifting Height	6 m
FEM/ISO Class	1Bm/M3
Number of Chain Falls	1
Motor Power	1.5 kW
Load Chain Dimensions	7.1 mm
Lifting Speed	6.8 m/min
Protection Class	IP 54
Weight	120 kg

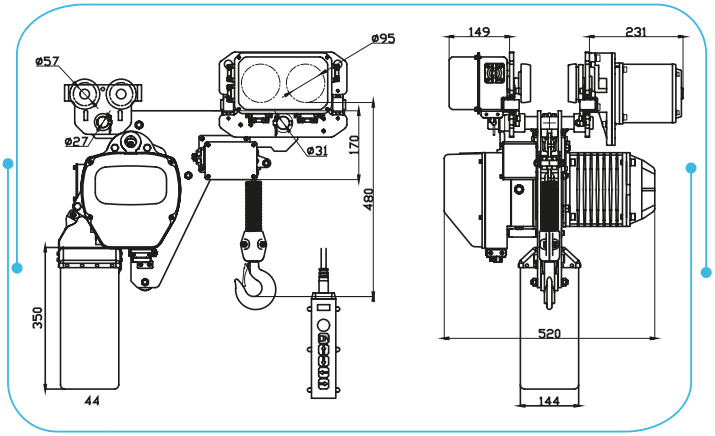

ATZCE 1A



ATZCE 2A

Hoist Code	ATZCE 2
Trolley Code	ATZCE-T2
Capacity	2 Ton
Lifting Height	6 m
FEM/ISO Class	1Bm/M3
Number of Chain Falls	1
Motor Power	3.0 kW
Load Chain Dimensions	10 mm
Lifting Speed	6.6 m/min
Protection Class	IP 54
Weight	190 kg

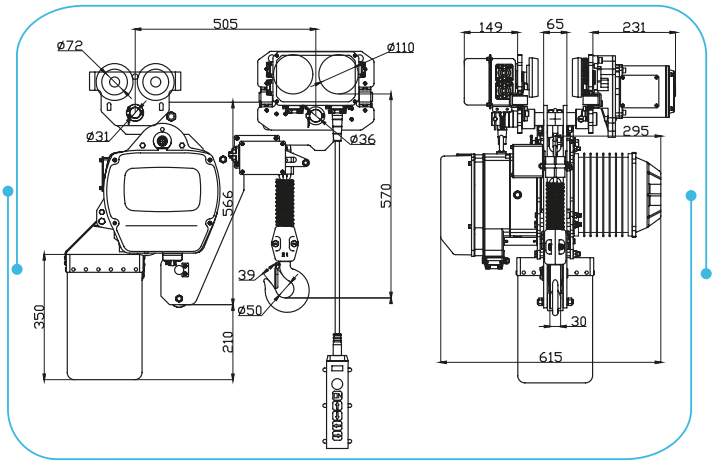

ATZCE 2A

IP54 Protection Class



Possibility of Using Low Ceilings



High Quality Forged Steel Hook



Cooling-Fin Body



Balanced Construction



Vibration-Free Travel

- Compact design allows for use in areas with low ceilings.
- Phase protection feature prevents incorrect electrical connections.

ATZCE-A Series Low Ceiling 4-Action Chain Hoists offer versatile usage options with their 4-way movement trolley and suitability for use in low ceiling heights.

MONOFAZE ELEKTRİKLİ ZİNCİRLİ VİNÇLER (230 VOLT)



ATZCE 1M

Capacity	1 Ton
Lifting Height	6 m
FEM/ISO Class	1Bm/M3
Number of Chain Falls	1
Motor Power	1.5 kW
Load Chain Dimensions	7.1 mm
Lifting Speed	6.8 m/min
Protection Class	IP 54
Voltage	230V - 50Hz/60Hz
Weight	74 kg

IP54 Protection Class

High Quality Forged Steel Hook



Cooling-Fin Body

230V Heavy Duty Single-Phase Motor

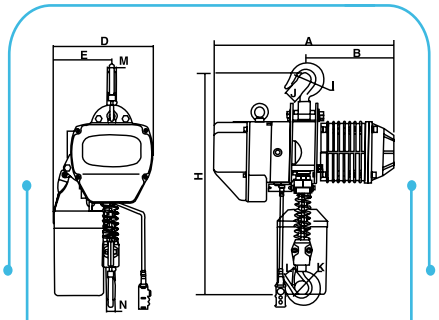

ATZCE1M

MODEL		ATZCE 1M
Dim.	A	520 mm
	B	260 mm
	D	300 mm
	E	176 mm
	I - K	42 mm
	J - L	32 mm
	M - N	24 mm
	Hmin	650 mm



ATEC 0.5

Capacity	500 kg
Lifting Height	6 m
Test Load	625 kg
Load Chain Dimensions	1
Lifting Speed	5 m/min
Motor Power	1.4 kW
Load Chain Dimensions	6.3 mm
Voltage	230 V
Weight	20 kg



ATEC 1

Capacity	1 Ton
Lifting Height	6 m
Test Load	1.25 Ton
Load Chain Dimensions	2
Lifting Speed	2.5 m/min
Motor Power	1.4 kW
Load Chain Dimensions	6.3 mm
Voltage	230 V
Weight	35 kg

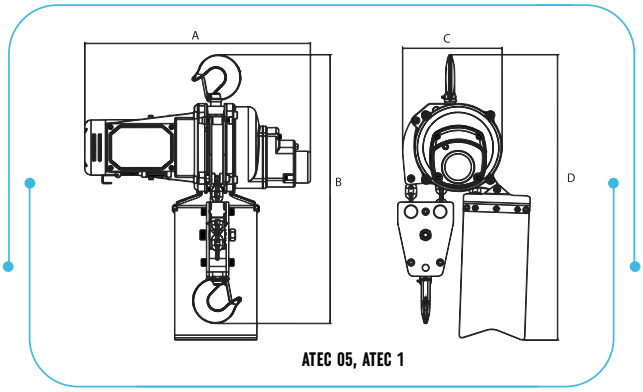

ATEC 05, ATEC 1

ATEC series Mini Electric Chain Hoists provide ease of use with their simple mechanical structure. The hoist hook is supplied with a 360-degree rotatable anti-slip safety clip.

MODEL		ATEC 05	ATEC 1
Dim.	A	420 mm	420 mm
	B	480 mm	500 mm
	C	168 mm	185 mm
	D	536 mm	536 mm

- Emergency braking system provides safe operation with its mechanical structure.
- Long-lasting performance thanks to the pulley system that reduces vibration and wear.

DUAL-SPEED ELECTRIC CHAIN HOISTS (380 VOLT)



ATZCS 0.5

Capacity	0.5 Ton
Lifting Height	6 m
FEM/ISO Class	2m/M5
Number of Chain Falls	1
Motor Power	0.9 / 0.3 kW
Load Chain Dimensions	6.3 mm
Speed (1st-2nd Stage)	7.6 - 2.5 m/min
Protection Class	IP 54
Weight	65 kg



ATZCS 2

Capacity	2 Ton
Lifting Height	6 m
FEM/ISO Class	2m/M5
Number of Chain Falls	2
Motor Power	1.1 / 0.37 kW
Load Chain Dimensions	8 mm
Speed (1st-2nd Stage)	2.5 - 0.85 m/min
Protection Class	IP 54
Weight	89 kg

NEW PRODUCT



ATZCS 0.5-30

Capacity	0.5 Ton
Lifting Height	30 m
FEM/ISO Class	2m/M5
Number of Chain Falls	1
Motor Power	0.9 / 0.3 kW
Load Chain Dimensions	6.3 mm
Speed (1st-2nd Stage)	7.6 - 2.5 m/min
Protection Class	IP 54
Weight	79 kg
Wired Remote Control Length	12 m
Wireless Remote Control	✔ Available

NEW PRODUCT



ATZCS 0.5-30

Capacity	2 Ton
Lifting Height	30 m
FEM/ISO Class	2m/M5
Number of Chain Falls	1
Motor Power	3.6 / 1.2 kW
Load Chain Dimensions	10 mm
Speed (1st-2nd Stage)	6 - 2 m/min
Protection Class	IP 54
Weight	181 kg
Wired Remote Control Length	12 m
Wireless Remote Control	✔ Available



ATZCS 1

Capacity	1 Ton
Lifting Height	6 m
FEM/ISO Class	2m/M5
Number of Chain Falls	1
Motor Power	1.1 / 0.37 kW
Load Chain Dimensions	8 mm
Speed (1st-2nd Stage)	5 - 1.7 m/min
Protection Class	IP 54
Weight	74 kg



ATZCS 3

Capacity	3 Ton
Lifting Height	6 m
FEM/ISO Class	2m/M5
Number of Chain Falls	1
Motor Power	3.0 / 1.0 kW
Load Chain Dimensions	11.2 mm
Speed (1st-2nd Stage)	6 - 2 m/min
Protection Class	IP 54
Weight	113 kg

NEW PRODUCT



ATZCS 1-30

Capacity	1 Ton
Lifting Height	30 m
FEM/ISO Class	2m/M5
Number of Chain Falls	1
Motor Power	1.1 / 0.37 kW
Load Chain Dimensions	8 mm
Speed (1st-2nd Stage)	5 - 1.7 m/min
Protection Class	IP 54
Weight	101 kg
Wired Remote Control Length	12 mt
Wireless Remote Control	✔ Available



ATZCS 5

Capacity	5 Ton
Lifting Height	6 m
FEM/ISO Class	2m/M5
Number of Chain Falls	2
Motor Power	3.0 / 1.0 kW
Load Chain Dimensions	11.2 mm
Speed (1st-2nd Stage)	3 - 1 m/min
Protection Class	IP 54
Weight	162 kg

ATZCS series dual-speed electric chain hoists feature a protection system against errors that may occur due to low frequency in the electric current.

IP55 Protection Class



Fan-Cooled Motor



Alloy Forged Hook



Japanese-Made Chain

- Operates quietly and efficiently thanks to the liquid oil-lubricated gearbox system.
- Provides solutions for precise handling operations with its dual-speed setting.
- Prevents incorrect electrical connections thanks to the phase protection feature.

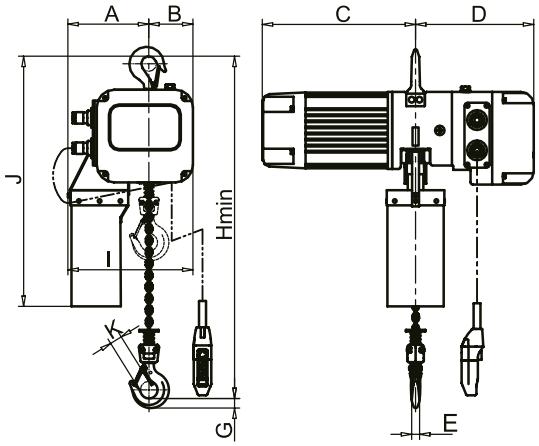

ATZCS 0.5, ATZCS 0.5-30 ATZCS 1, ATZCS 1-12, ATZCS 1-30, ATZCS 2, ATZCS 2-12, ATZCS 2-30, ATZCS 3, ATZCS 5

MODEL		ATZCS 0.5	ATZCS 0.5-30	ATZCS 1	ATZCS 1-30	ATZCS 2	ATZCS 2-30	ATZCS 3	ATZCS 5
Dim.	A	190 mm	190 mm	190 mm	190 mm	235 mm	282 mm	282 mm	338 mm
	B	102 mm	102 mm	102 mm	102 mm	57 mm	166 mm	166 mm	110 mm
	C	334 mm	334 mm	354 mm	354 mm	469 mm	469 mm	469 mm	469 mm
	D	307 mm	307 mm	307 mm	307 mm	307 mm	336 mm	336 mm	336 mm
	E	18 mm	18 mm	20 mm	20 mm	25 mm	25 mm	25 mm	35 mm
	G	22 mm	22 mm	25 mm	25 mm	43 mm	43 mm	43 mm	51 mm
	I	292 mm	292 mm	292 mm	292 mm	235 mm	448 mm	448 mm	448 mm
	J	566 mm	566 mm	584 mm	584 mm	658 mm	740 mm	740 mm	829 mm
	K	27 mm	27 mm	31 mm	31 mm	38 mm	38 mm	38 mm	52 mm
	Hmin	443 mm	443 mm	533 mm	533 mm	702 mm	633 mm	633 mm	915 mm

CHAIN STAGE HOISTS

NEW PRODUCT



ATTM1

Capacity	1 Ton
Lifting Height	25 m
FEM/ISO Class	M3(1Bm)
Number of Chain Falls	1
Motor Power	0.75 kW
Load Chain Dimensions	7.1 x 21 mm
Lifting Speed	4 m/min
Protection Class	IP 66
Weight	29 kg



Chain Bag



Transport Crate



Dual DC Electromagnetic Brake

ATTM series Chain Stage Hoists offer safe lifting for all your stage setups with their balanced and synchronized operation.

- The mechanical slip clutch provides protection by shifting the force from the lifting motor in case of overload.
- Dual DC electromagnetic brakes provide multiple braking actions, guaranteeing safe operation.

STAGE CRANE CONTROL PANEL

NEW PRODUCT



ATTM8KP

Capacity	1 Ton
Voltage	380V~415V / 50 Hz-3 PH
Control	Direct Control - DC
Number of Channels	8
Input	CEE32A-5P-6h
Output	CEE16A-4P-6h
Operating Temperature	-40°C ~ 80°C.
Weight	12 kg



Number of Channels: 8



Lightweight and Durable Carrying Case

PALLET LIFTING FORKS

NEW PRODUCT



ATPTA 2

Lifting Capacity	2 Ton
Fork Width	400-900 mm
Fork Length	1000 mm
Pallet Height	1300-2000 mm
Machine Width	900 mm
Weight	198 kg



Automatic Load Balancing System



Adjustable Fork Width

ATPTA series Pallet Lifting Forks are used via cranes to lift and transport palletized loads. They offer safe lifting thanks to the automatic load balancing system.

- Enables lifting of different sized pallets thanks to its adjustable fork width.
- Automatic load balancing system provides stable lifting during operation.

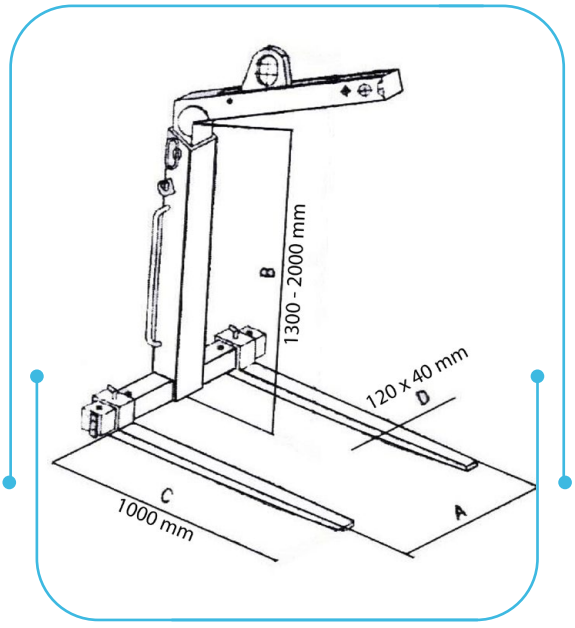

PACKAGE HANDLING TROLLEYS



ATYA150

Capacity	150 kg
Width	480 mm
Length	735 mm
Height	820 mm
Weight	7.6 kg



ATYA300

Capacity	300 kg
Width	610 mm
Length	900 mm
Height	870 mm
Weight	14 kg





Foldable Handles



360° Swivel Rear Wheels

ATYA series Package Trolleys feature foldable handles and are manufactured from robust, durable materials in accordance with high quality standards. They provide easy maneuverability with 360-degree swivel rear wheels.

CARGO TROLLEYS



ATYA 8

	X4	Y4
Number of Wheels	4 Pcs.	4 Pcs.
Contact Surface	150 mm	130 x 130 mm
Handle Length Dim.	1020 mm	300 - 1000 mm
Total Dimension	230 x 230 x 110 mm	170 x 130 x 110 mm
Load Carrying Capacity	4 Ton + 2 Ton + 2 Ton = 8 Ton	
Net Weight	28 kg	

ATYA 16

X8	Y8
8 Pcs.	8 Pcs.
160 mm	200 x 160 mm
1300 mm	400 - 1300 mm
530 x 420 x 110 mm	200 x 200 x 110 mm
8 Ton + 4 Ton + 4 Ton = 16 Ton	
72 kg	

ATYA 24

	X12	Y12
Number of Wheels	12 Pcs.	12 Pcs.
Contact Surface	180 mm	220 x 180 mm
Handle Length Dim.	1300 mm	400-1300 mm
Total Dimension	750 x 540 x 110 mm	280 x 200 x 110 mm
Load Carrying Capacity	12 Ton + 6 Ton + 6 Ton = 24 Ton	
Net Weight	100 kg	

ATYA 36

X18	Y18
18 Pcs.	18 Pcs.
200 mm	280 x 200 mm
1470 mm	400 - 1500 mm
760 x 620 x 110 mm	300 x 280 x 110 mm
18Ton + 9 Ton + 9 Ton = 36 Ton	
138 kg	

ATYA 48

	X24	Y24
Number of Wheels	12 Pcs.	12 Pcs.
Contact Surface	220 mm	330 x 200 mm
Handle Length Dim.	1500 mm	600 - 2000 mm
Total Dimension	882 x 684 x 162 mm	230 x 330 x 162 mm
Load Carrying Capacity	24 Ton + 12 Ton + 12 Ton = 48 Ton	
Net Weight	240 kg	

ATYA 64

X32	Y32
16 Pcs.	16 Pcs.
250 mm	420x220 mm
1760 mm	800-2000 mm
1103 x 690 x 169 mm	230 x 420 x 169 mm
32 Ton + 16 Ton + 16 Ton = 64 Ton	
310 kg	

ATYA series Cargo Trolleys are used for transporting and positioning bulky loads. Anti-slip pads provide high friction for secure transport. Due to its compact structure, it has a low profile.

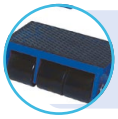

Non-Marking Casters



Corrosion and Scratch Resistant Body



ATTP 2.5

Price for 1 Pallet (Set 6)	
Load Capacity	2.5 Ton
Min. Fork Height	75 mm
Max. Fork Height	190 mm
Fork Width	550 mm
Fork Length	1150 mm
Total Length	1533 mm
Total Height	1214 mm
Steering Wheel	180 mm
Load Wheel	74x70 mm
Turning Radius	1266 mm
Weight	64.5 kg



Bakelite Coated Control Lever



Cast Iron Pump



Polyamide Wheel

* Products for sale may feature black or white polyamide wheels.
The material is the same, with only the color being different.



ATTP

Price for 1 Pallet (Set 6)	
Load Capacity	2.5 Ton
Min. Fork Height	75 mm
Max. Fork Height	190 mm
Fork Width	550 mm
Fork Length	1150 mm
Total Length	1533 mm
Total Height	1214 mm
Steering Wheel	180 mm
Load Wheel	74x70 mm
Turning Radius	1266 mm
Weight	66 kg



Bakelite Coated Control Lever



Cast Iron Pump



Polyamide Wheel

* Products for sale may feature black or white polyamide wheels.
The material is the same, with only the color being different.



ATTP 3

Price for 1 Pallet (Set 6)	
Load Capacity	3 Ton
Min. Fork Height	75 mm
Max. Fork Height	190 mm
Fork Width	550 mm
Fork Length	1150 mm
Total Length	1533 mm
Total Height	1214 mm
Steering Wheel	180 mm
Load Wheel	74x70 mm
Turning Radius	1266 mm
Weight	77 kg



Bakelite Coated Control Lever



Cast Iron Pump



Polyurethane Coated Wheel on Cast Iron Body

* Products for sale may feature black or red polyurethane wheel coatings.
The material is the same, with only the color being different.

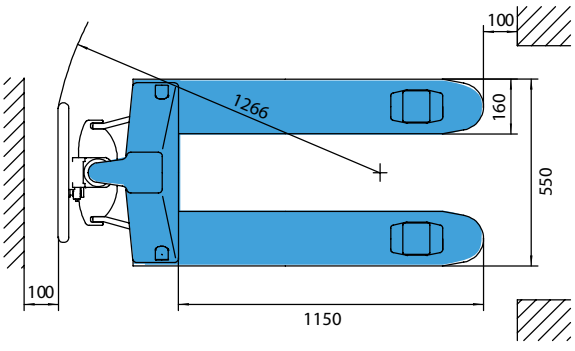

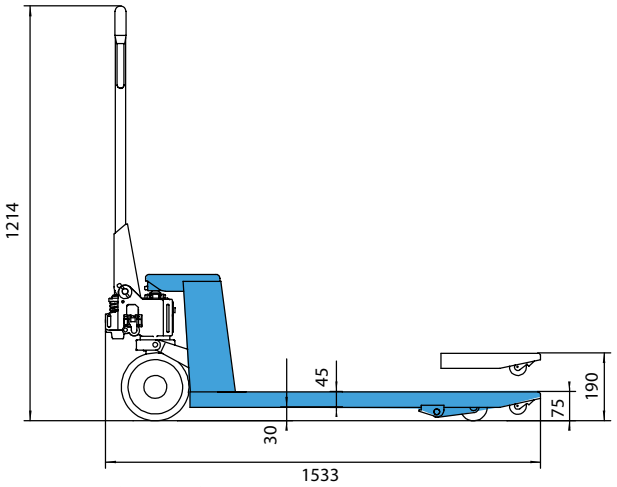

ATTP, ATTP 2.5, ATTP 3
*All dimensions are in mm.

TRANSPALETLER



Heavy Duty Type

Overload Protection

ATTP 5

Load Capacity	5 Ton
Min. Fork Height	88 mm
Max. Fork Height	205 mm
Fork Width	550 mm
Fork Length	1150 mm
Total Length	1544 mm
Total Height	1253 mm
Steering Wheel	200 mm
Load Wheel	85x80 mm
Turning Radius	1300 mm
Weight	106.5 kg



Cast Iron Pump



Polyurethane Coated Wheel on Cast Iron Body

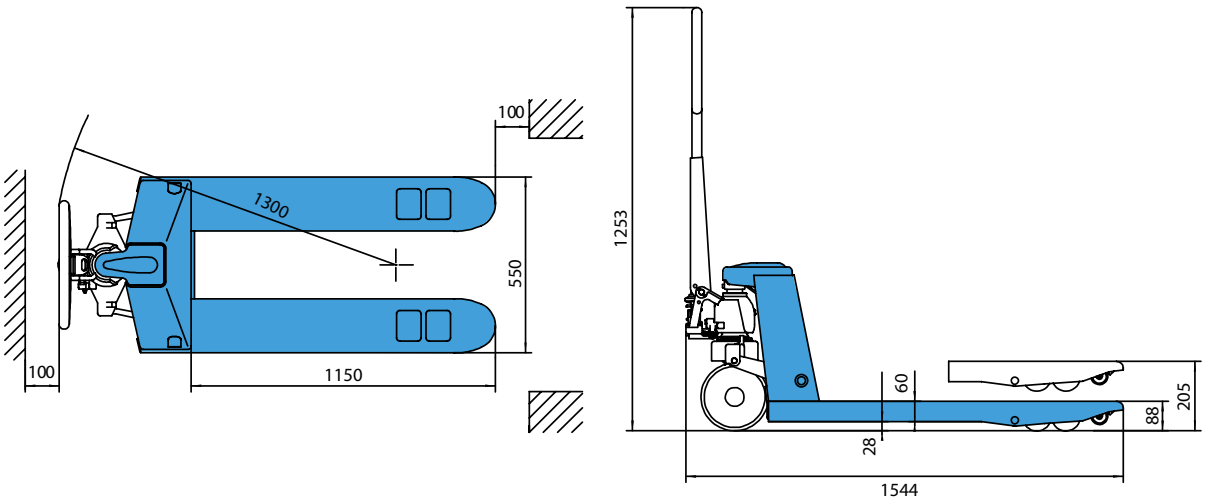

ATTP 5

*All dimensions are in mm.

MİNİ TRANSPALET



ATTP 0.5

Load Capacity	500 kg
Min. Fork Height	60 mm
Max. Fork Height	150 mm
Fork Width	380 mm
Fork Length	800 mm
Total Length	1126 mm
Total Height	1110 mm
Steering Wheel	127 mm
Load Wheel	58 mm
Weight	35 kg

- Provides ease of use in narrow spaces thanks to its compact design.
- User-friendly with its lightweight construction.

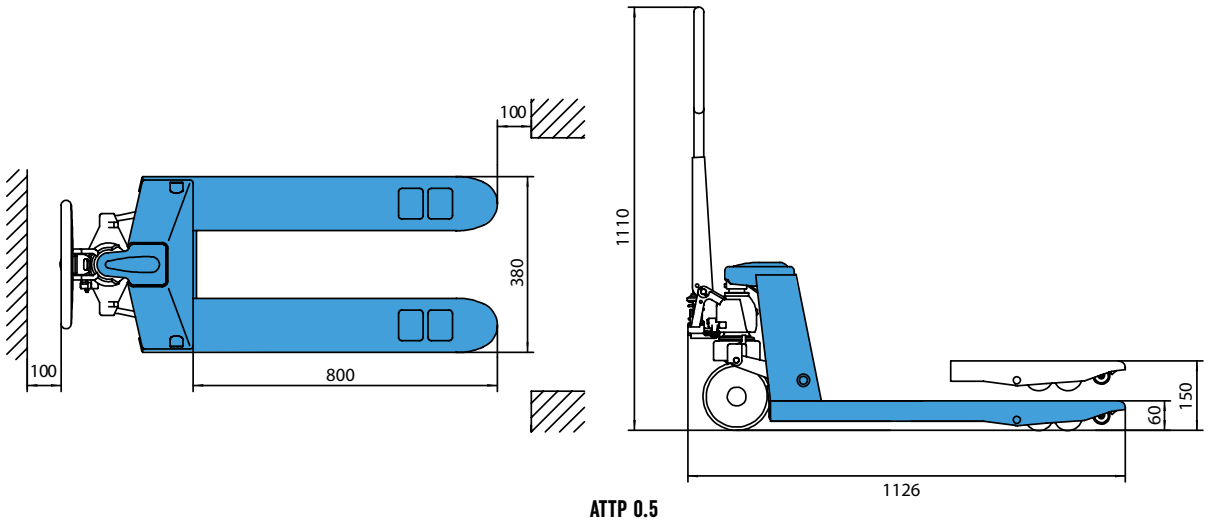

ATTP 0.5

*All dimensions are in mm.

LOW PROFILE PALLET TRUCK



ATTPD 1

Load Capacity	1 Ton
Min. Fork Height	35 mm
Max. Fork Height	105 mm
Fork Width	550 mm
Fork Length	1100 mm
Total Length	1533 mm
Total Height	1174 mm
Steering Wheel	150 mm
Load Wheel	35x50 mm
Turning Radius	1266 mm
Weight	85 kg



Bakelite Coated Control Lever



Cast Iron Pump



Iron Front Wheel



Polyurethane Coated Wheel on Cast Iron Body

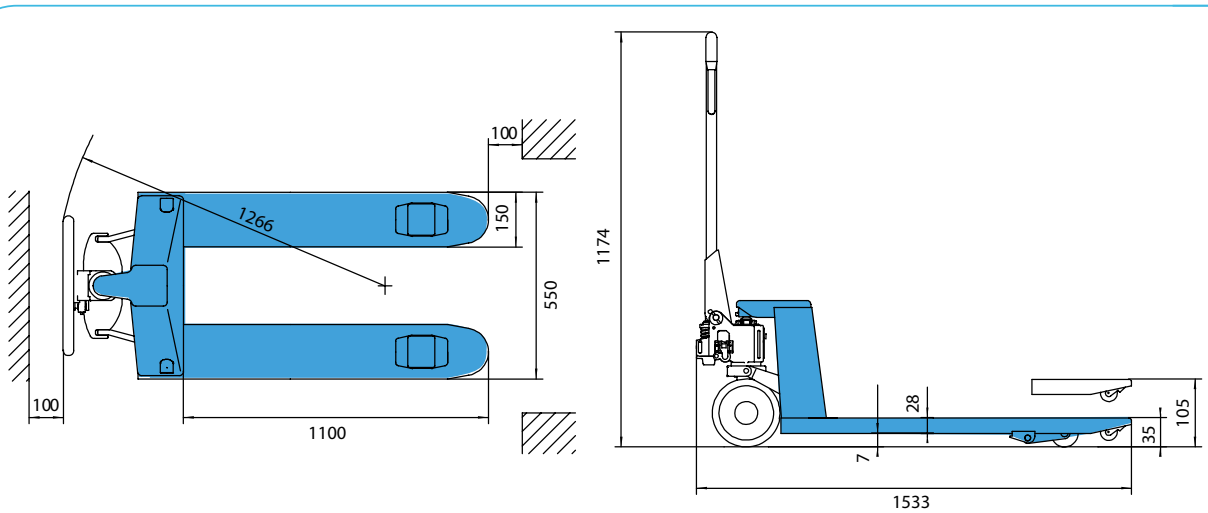

ATTPD1

*All dimensions are in mm.

BRAKE SYSTEM PALLET TRUCK



ATTPF

Load Capacity	2.5 Ton
Min. Fork Height	85 mm
Max. Fork Height	200 mm
Fork Width	550 mm
Fork Length	1150 mm
Total Length	1533 mm
Total Height	1224 mm
Steering Wheel	200 mm
Load Wheel	80 mm
Turning Radius	1266 mm
Weight	73 Kg



Safety-Focused Brake System



Cast Iron Pump



Polyurethane Coated Wheel on Cast Iron Body

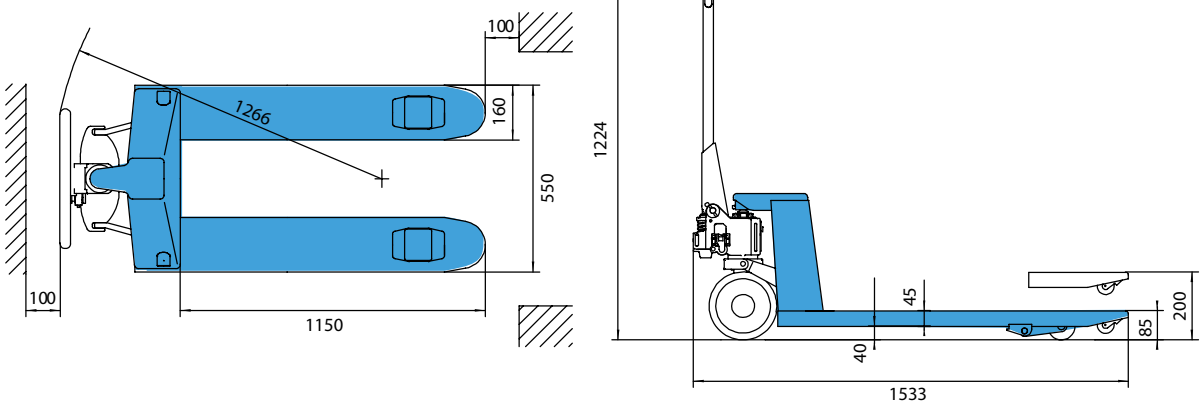

ATTPF

*All dimensions are in mm.

LONG PALLET TRUCKS





ATTPU

Load Capacity	2 Ton
Min. Fork Height	75 mm
Max. Fork Height	190 mm
Fork Width	550 mm
Fork Length	1500 mm
Total Length	1883 mm
Total Height	1214 mm
Steering Wheel	180 mm
Load Wheel	74x70 mm
Turning Radius	1690 mm
Weight	85 kg

ATTPU 2

Load Capacity	1 Ton
Min. Fork Height	75 mm
Max. Fork Height	190 mm
Fork Width	550 mm
Fork Length	2000 mm
Total Length	2383 mm
Total Height	1214 mm
Steering Wheel	180 mm
Load Wheel	74x70 mm
Turning Radius	2190 mm
Weight	102 kg



Bakelite Coated Control Lever



Cast Iron Pump



Polyurethane Coated Wheel on Cast Iron Body

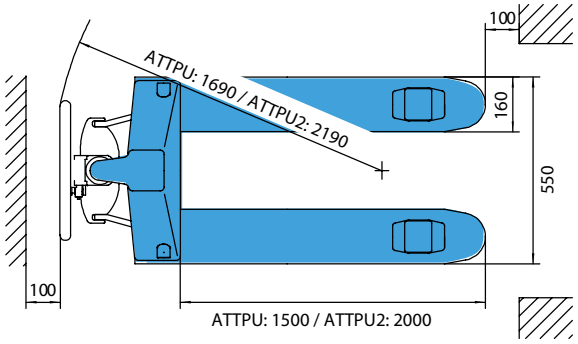

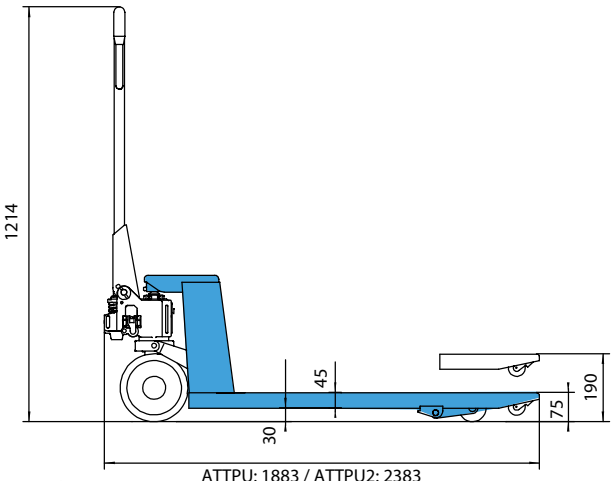

ATTPU, ATTPU2

*All dimensions are in mm.

4-WAY DIRECTIONAL PALLET TRUCK

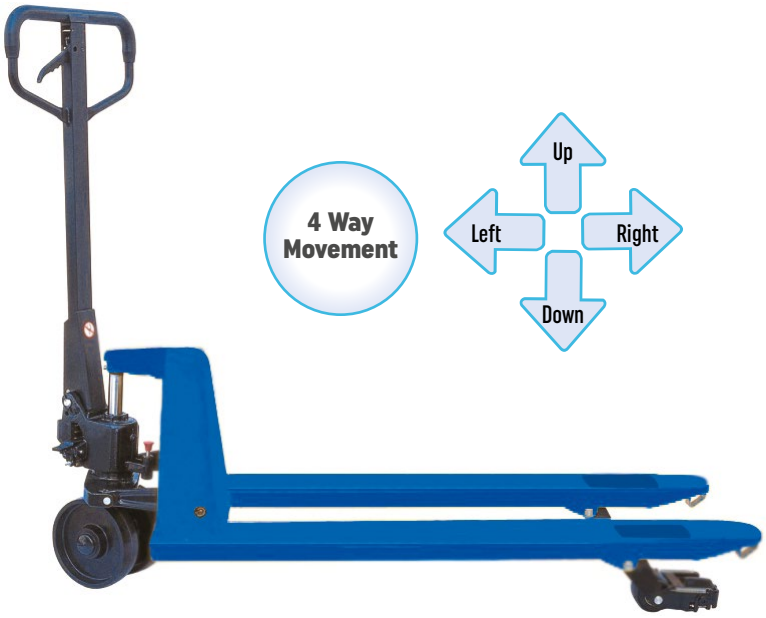

ATTPH

Load Capacity	2.5 Ton
4-Way Max. Load Capacity	1.5 Ton
Min. Fork Height	85 mm
Max. Fork Height	200 mm
Fork Width	550 mm
Fork Length	1150 mm
Total Length	1533 mm
Total Height	1224 mm
Steering Wheel	200 mm
Load Wheel	65x60 mm
Turning Radius	1266 mm
Weight	65 kg



Bakelite Coated Control Lever



Yön Sabitleme Kilidi



Polyurethane Coated Wheel on Cast Iron Body

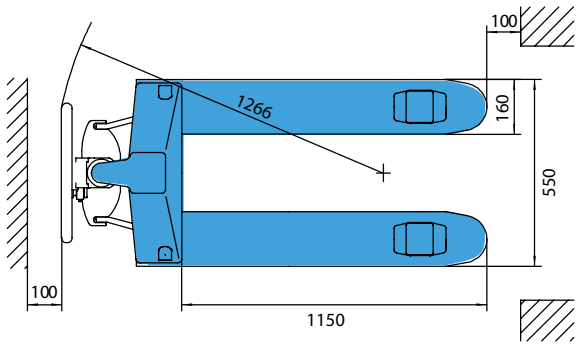

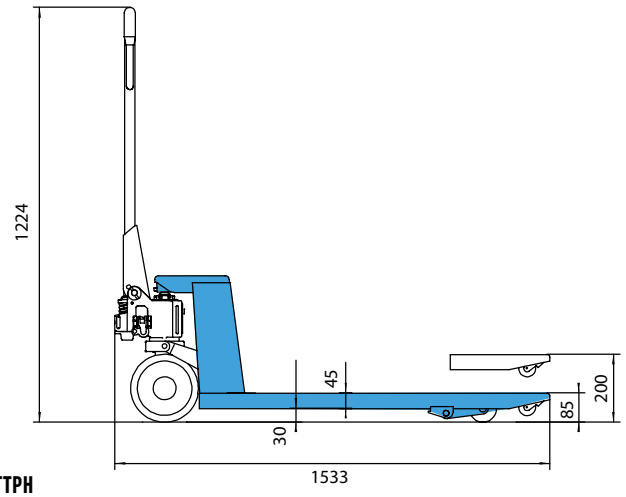

ATTPH

*All dimensions are in mm.

REEL CARRIER PALLET TRUCK



ATTPB

Load Capacity	1 Ton
Reel Diameter	700-1200 mm
Fork Width	965 mm
Fork Length	1150 mm
Total Height	432 mm
Steering Wheel	200 mm
Load Wheel	80 mm
Weight	135 kg



Bakelite Coated Control Lever



Cast Iron Pump



Polyurethane Coated Wheel on Cast Iron Body

- Specially designed for products such as fabric rolls, reels, coils, etc.
- Provides a strong grip on materials thanks to its wide legs.

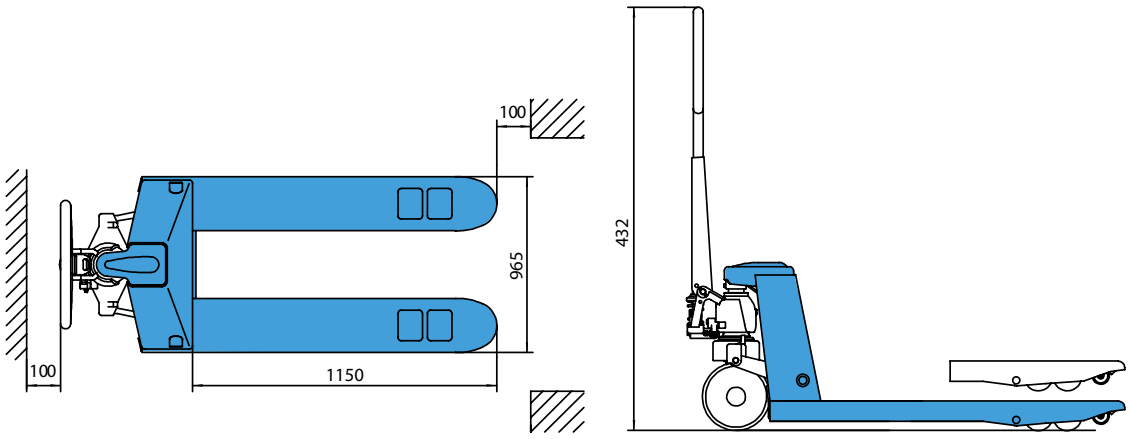

ATTPB

*All dimensions are in mm.

PALLET TRUCK WITH SUPPORT PANEL



ATTPK

Load Capacity	2.5 Ton
Min. Fork Height	85 mm
Max. Fork Height	200 mm
Fork Width	550 mm
Fork Length	1150 mm
Handle Height	432 mm
Steering Wheel	200 mm
Load Wheel	80x70 mm
Weight	95 kg



Bakelite Coated Control Lever



Cast Iron Pump



Polyurethane Coated Wheel on Cast Iron Body

- The support panel allows for easy securing of loads.

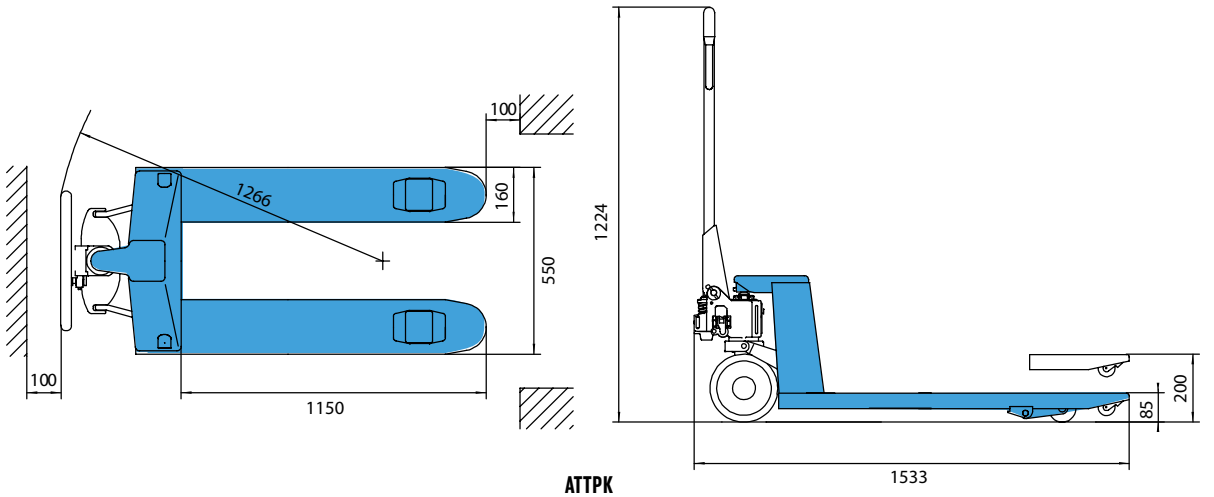

ATTPK

*All dimensions are in mm.

SHORT PALLET TRUCK



ATTPK 2

Load Capacity	2 Ton
Min. Fork Height	75 mm
Max. Fork Height	190 mm
Fork Width	550 mm
Fork Length	800 mm
Total Length	1170 mm
Total Height	1160 mm
Steering Wheel	160 mm
Load Wheel	70x60 mm
Weight	50 kg

- Provides ease of use in confined spaces thanks to its short fork length.



Polyurethane Coated Wheel on Cast Iron Body

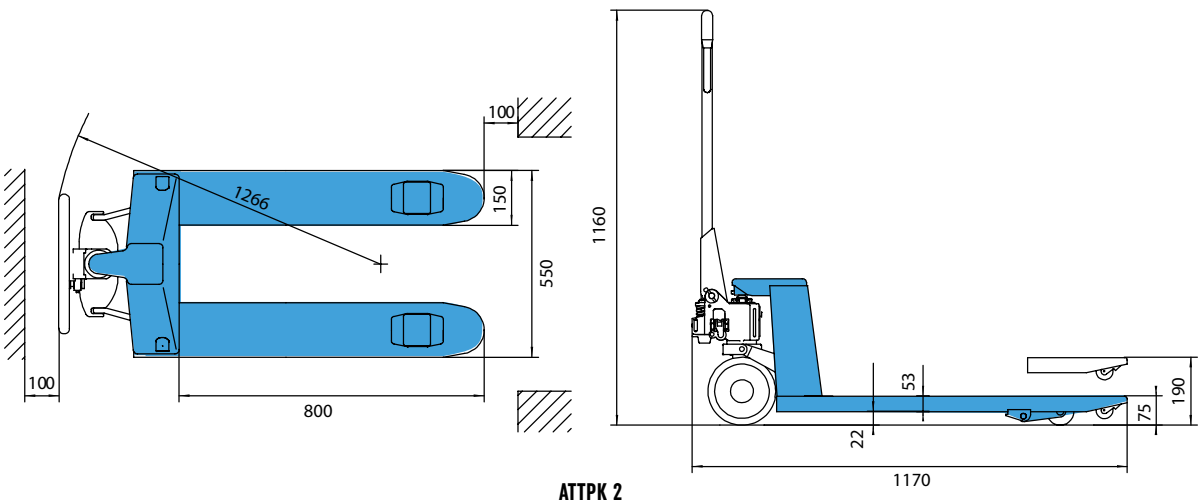

ATTPK 2

*All dimensions are in mm.

PALLET TRUCK WITH SCALE



ATTPT2E

Load Capacity	2 Ton
Min. Fork Height	85 mm
Max. Fork Height	175 mm
Fork Width	540 mm
Fork Length	1150 mm
Total Length	1570 mm
Steering Wheel	160 mm
Load Wheel	70 mm
Power Source	5 V
Scale Accuracy	±0.005
Weight	120 kg



Bakelite Coated Control Lever



Cast Iron Pump



With Scale

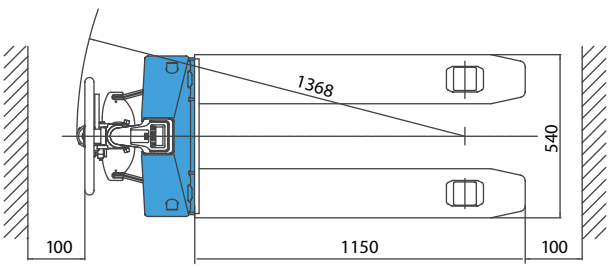

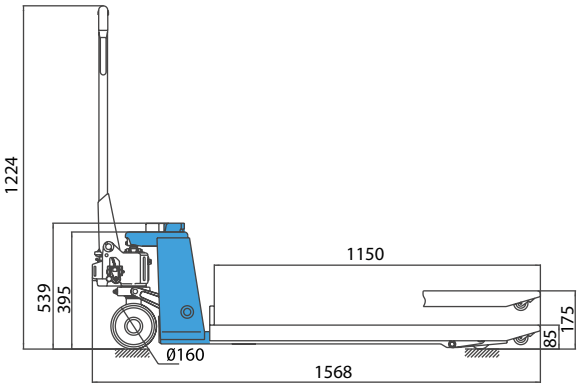

ATTPT2E

*All dimensions are in mm.

STAINLESS STEEL PALLET TRUCK (INOX)



ATTPP 2.5

Load Capacity	2.5 Ton
Min. Fork Height	85 mm
Max. Fork Height	200 mm
Fork Width	550 mm
Fork Length	1150 mm
Total Length	1533 mm
Total Height	1224 mm
Steering Wheel	200 mm
Load Wheel	74x70 mm
Turning Radius	1266 mm
Weight	77.5 kg

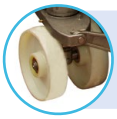

Polyamide Wheel



Bakelite Coated Control Lever



Cast Iron Pump

- Provides long-lasting use in the food and pharmaceutical sectors, cold storage, and humid working environments.

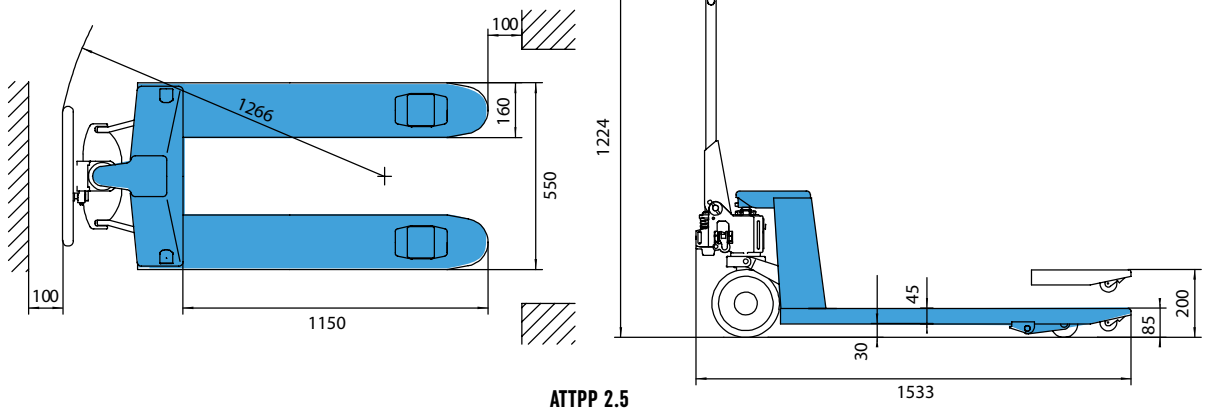

ATTPP 2.5

*All dimensions are in mm.

GALVANIZED TRANSPALET



ATTPG 2.5

Load Capacity	2.5 Ton
Min. Fork Height	85 mm
Max. Fork Height	200 mm
Fork Width	550 mm
Fork Length	1100 mm
Total Length	1533 mm
Total Height	1224 mm
Steering Wheel	200 mm
Load Wheel	74x70 mm
Turning Radius	1266 mm
Weight	70 kg



Bakelite Coated Control Lever



Cast Iron Pump



Hot Dip Galvanized

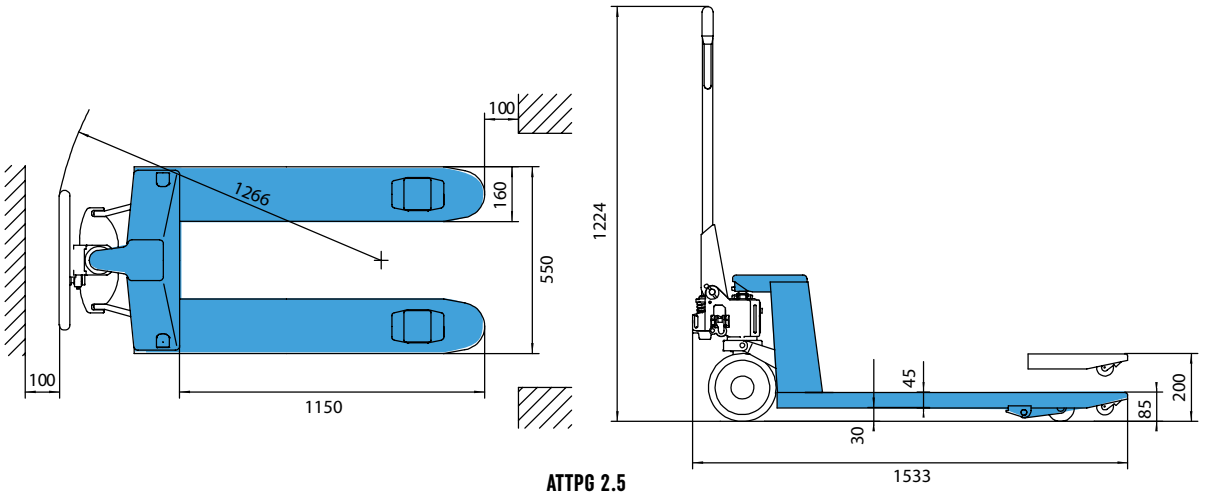

ATTPG 2.5

*All dimensions are in mm.

SCISSOR PALLET TRUCK



ATTPM

Load Capacity	1 Ton
Min. Fork Height	85 mm
Max. Fork Height	800 mm
Fork Width	550 mm
Fork Length	1150 mm
Total Length	1515 mm
Total Height	1225 mm
Steering Wheel	180 mm
Load Wheel	74x50 mm
Turning Radius	1360 mm
Weight	107.5 Kg



Bakelite Coated Control Lever



Cast Iron Pump



Telescopic Jack System

- The support legs automatically settle onto the ground during the lifting process.

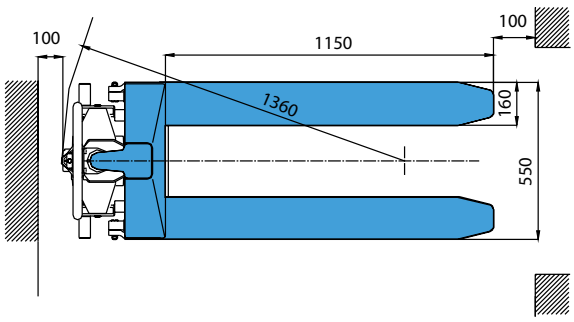

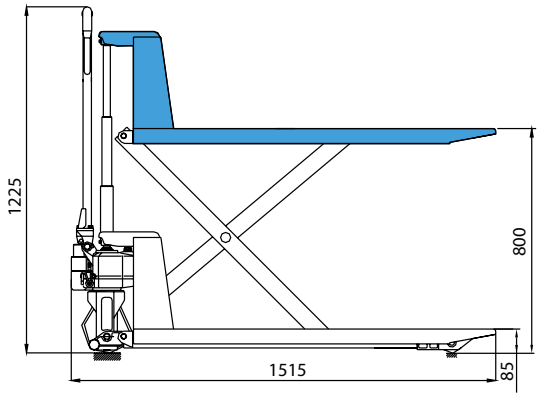

ATTPM

*All dimensions are in mm.

HIGH CHASSIS SCISSOR PALLET TRUCK



ATTPS

Load Capacity	1 Ton
Min. Fork Height	85 mm
Max. Fork Height	800 mm
Fork Width	550 mm
Fork Length	1220 mm
Total Length	1785 mm
Total Height	1210 mm
Steering Wheel	180 mm
Load Wheel	74x50 mm
Turning Radius	1670 mm
Weight	127.5 kg



Bakelite Coated Control Lever



Cast Iron Pump

- The support legs automatically settle onto the ground during the lifting process.

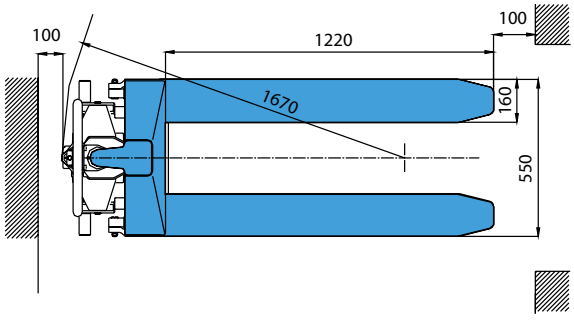

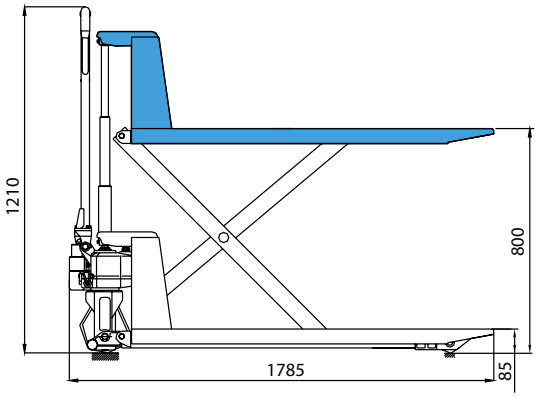

ATTPS

*All dimensions are in mm.

MOBILE SCISSOR PLATFORMS

ATP 150



Lifting Capacity	150 kg
Min. Table Height	225 mm
Max. Table Height	740 mm
Lifting Height / Stroke	515 mm
Table Dimensions	740x450x35 mm
Overall Height	935 mm
Overall Length	834 mm
Pedal Strokes for Max. Load	25
Wheel Diameter	100 mm
Weight	44 kg

ATP 300



Lifting Capacity	300 kg
Min. Table Height	340 mm
Max. Table Height	900 mm
Lifting Height / Stroke	560 mm
Table Dimensions	855x500x50 mm
Overall Height	970 mm
Overall Length	924 mm
Pedal Strokes for Max. Load	32
Wheel Diameter	127 mm
Weight	82 kg

ATP 500



Lifting Capacity	500 kg
Min. Table Height	340 mm
Max. Table Height	900 mm
Lifting Height / Stroke	560 mm
Table Dimensions	855x500x50 mm
Overall Height	970 mm
Overall Length	924 mm
Pedal Strokes for Max. Load	45
Wheel Diameter	127 mm
Weight	87 kg

ATP 800



Lifting Capacity	800 kg
Min. Table Height	420 mm
Max. Table Height	1000 mm
Lifting Height / Stroke	580 mm
Table Dimensions	1000x510x55 mm
Overall Height	996 mm
Overall Length	1150 mm
Pedal Strokes for Max. Load	70
Wheel Diameter	150 mm
Weight	115 kg

ATP 1500



Lifting Capacity	1500 kg
Min. Table Height	420 mm
Max. Table Height	1000 mm
Lifting Height / Stroke	580 mm
Table Dimensions	1220x610x60 mm
Overall Height	962 mm
Overall Length	1379 mm
Pedal Strokes for Max. Load	70
Wheel Diameter	150 mm
Weight	135 kg

ATDP 350



DOUBLE SCISSOR

Lifting Capacity	350 kg
Min. Table Height	350 mm
Max. Table Height	1300 mm
Lifting Height / Stroke	950 mm
Table Dimensions	910x500x50 mm
Overall Height	970 mm
Overall Length	980 mm
Pedal Strokes for Max. Load	60
Wheel Diameter	127 mm
Weight	105 kg

ATDP 800



DOUBLE SCISSOR

Lifting Capacity	800 kg
Min. Table Height	475 mm
Max. Table Height	1500 mm
Lifting Height / Stroke	1025 mm
Table Dimensions	1220x610x60 mm
Overall Height	962 mm
Overall Length	1375 mm
Pedal Strokes for Max. Load	70
Wheel Diameter	150 mm
Weight	172 kg



Heavy-Duty Steel Construction



Hydraulic Lift System



Easy-to-use Wheel Brakes

ATP and ATDP series Scissor Lifts provide superior quality through their heavy-duty steel structure and practical rear wheel braking system.

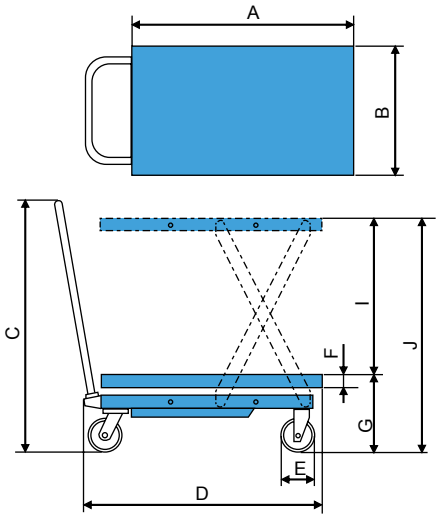

ATP 150, ATP 300, ATP 500 ATP 800, ATP 1500,

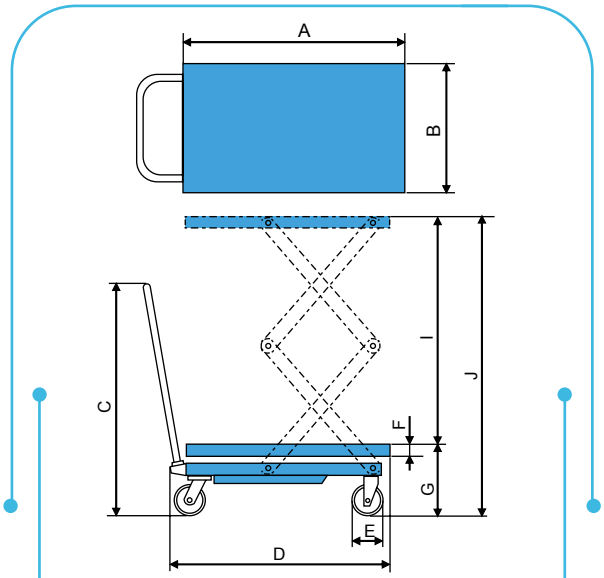

ATDP 350, ATDP 800

MODEL		ATP 150	ATP 300	ATP 500	ATP 800	ATP 1500	ATDP 350	ATDP 800
Dimensions	A	740 mm	855 mm	855 mm	1000 mm	1220 mm	910 mm	1220 mm
	B	450 mm	500 mm	500 mm	510 mm	610 mm	500 mm	610 mm
	C	935 mm	970 mm	970 mm	996 mm	962 mm	970 mm	962 mm
	D	834 mm	924 mm	924 mm	1150 mm	1379 mm	980 mm	1375 mm
	E	100 mm	127 mm	127 mm	150 mm	150 mm	127 mm	150 mm
	F	35 mm	50 mm	50 mm	55 mm	60 mm	50 mm	60 mm
	G	225 mm	340 mm	340 mm	420 mm	420 mm	350 mm	475 mm
	I	515 mm	560 mm	560 mm	580 mm	580 mm	950 mm	1025 mm
	J	740 mm	900 mm	900 mm	1000 mm	1000 mm	1300 mm	1500 mm

DRUM STACKER

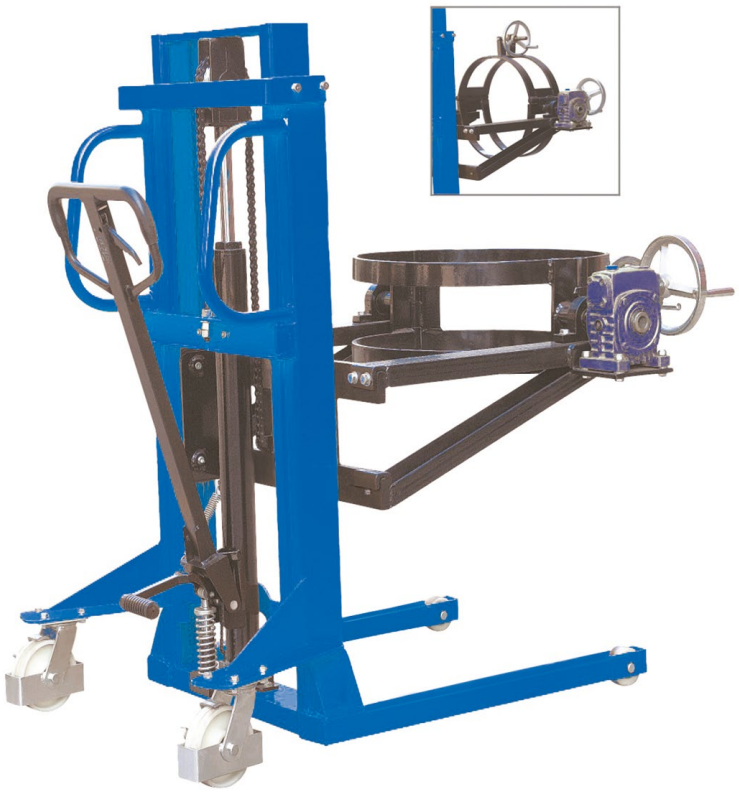

ATVIM

Lifting Capacity	350 Kg
Max. Lifting Height	1945 mm
Min. Fork Height	385 mm
Fork Width	750 mm
Machine Height	1270 mm
Machine Width	1050 mm
Machine Length	1520 mm
Wheelbase	1115 mm
Turning Radius	1200 mm
Load Center Distance	570 mm
Weight	232 kg



Bakelite Coated Control Lever



Bakelite Coated Control Lever



Practical Foot Pedal

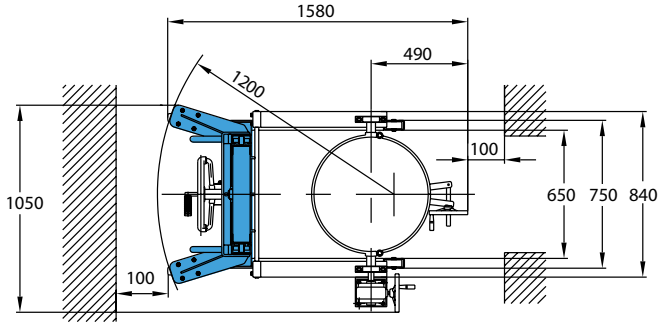

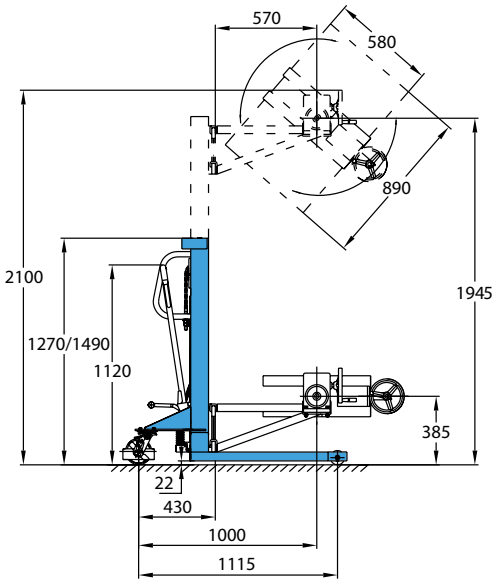

ATVIM

*All dimensions are in mm.

MANUAL STACKERS



ATMI 1016

Lifting Capacity	1 Ton
Max. Lifting Height	1600 mm
Min. Fork Height	90 mm
Fork Width	300-850 mm
Fork Length	1000 mm
Machine Height	1500 mm
Machine Width	2100 mm
Machine Length	1500 mm
Wheelbase	865 mm
Turning Radius	400 mm
Load Center Distance	1250 mm
Weight	255 kg

ATMI 1516

Lifting Capacity	1.5 Ton
Max. Lifting Height	1600 mm
Min. Fork Height	90 mm
Fork Width	300-850 mm
Fork Length	1000 mm
Machine Length	1500 mm
Machine Height	2100 mm
Min. Machine Height	1500 mm
Machine Width	865 mm
Load Center Distance	400 mm
Turning Radius	1250 mm
Weight	290 kg



Adjustable Fork Width



Foot Pump



Practical Foot Brake

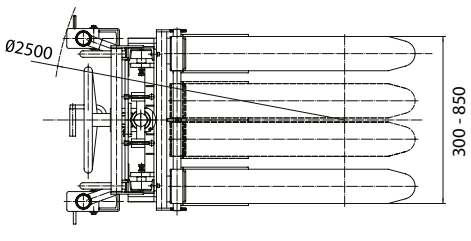

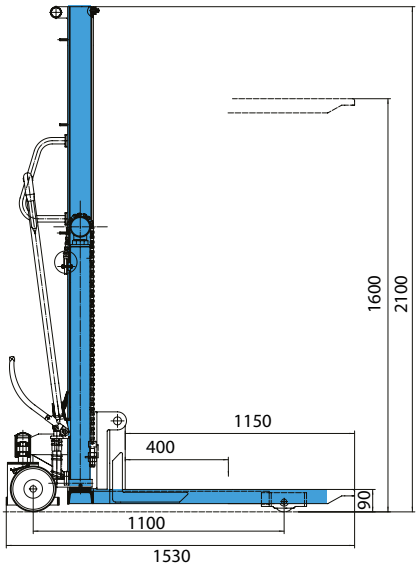

ATMI1016, ATMI1516

*All dimensions are in mm.

MANUAL STACKERS



Double Stage Elevator

ATMI 1025

Lifting Capacity	1 Ton
Max. Lifting Height	2500 mm
Min. Fork Height	90 mm
Fork Width	300-850 mm
Fork Length	1000 mm
Machine Length	1500 mm
Machine Height	1810 mm
Min. Machine Height	1500 mm
Machine Width	865 mm
Load Center Distance	400 mm
Turning Radius	1250 mm
Weight	355 kg

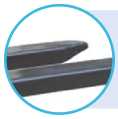

Adjustable Fork Width



Foot Pump



Practical Foot Brake

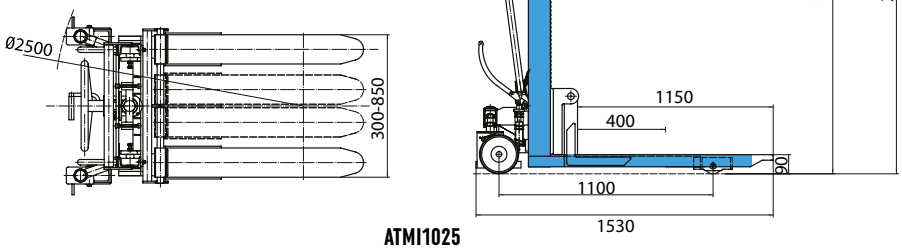

ATMI1025

*All dimensions are in mm.


ATLAS PRO
300 KG
ATLAS PRO
Yükünüzü Hafifletir
Maks.Kapasite:300KG